Valvoline Instant Oil Change

THREE BAY, RIGHT HAND, TUCSON, AZ
2920 South Park Avenue Tucson, AZ 85713

DRAWING INDEX

SHEET #	SHEET NAME
GENERAL	
CS-1	COVER SHEET
CS-2	COVER SHEET
G-1.1	LIFE SAFETY PLAN
G-2.1	ADA STANDARDS
G-3.1	OPERATIONS EQUIPMENT PLAN AND SCHEDULE
C1.0	ARCHITECTURAL REFERENCE SITE PLAN
ARCHITECTURAL	
A-1.1	FLOOR PLAN - LOWER LEVEL
A-1.2	FLOOR PLAN - UPPER LEVEL
A-2.1	ROOF PLAN/ TOWER SECTIONS & DETAILS
A-3.1	EXTERIOR ELEVATIONS
A-3.2	EXTERIOR ELEVATIONS
A-4.1	BUILDING SECTIONS
A-4.2	BUILDING SECTIONS
A-5.1	WALL SECTIONS
A-6.1	DOOR - SF SCHEDULES AND DETAILS
A-6.2	DOOR DETAILS
A-7.1	DETAILS AND INTERIOR ELEVATIONS
A-7.2	INTERIOR ELEVATIONS
A-8.1	REFLECTED CEILING PLANS
A-9.1	PIT OPENING DETAILS
A-10.1	DUMPSTER ENCLOSURE
A-11.1	PLACARD PLACEMENT INFO
STRUCTURAL	
S1.0	GENERAL STRUCTURAL NOTES
S1.1	SPECIAL INSPECTIONS
S1.2	SPECIAL INSPECTIONS
S1.3	TYPICAL DETAILS
S1.4	TYPICAL DETAILS
S1.5	TYPICAL DETAILS
S1.6	TYPICAL DETAILS
S2.0	FOUNDATION PLAN
S2.1	FLOOR FRAMING PLAN
S2.2	FLOOR PENETRATION PLAN
S3.0	ROOF FRAMING PLAN
S4.0	FOUNDATION DETAILS
S5.0	ROOF FRAMING DETAILS
S5.1	ROOF FRAMING DETAILS
MECHANICAL	
M-1.1	MECHANICAL PLAN - LOWER LEVEL
M-1.2	MECHANICAL PLAN - UPPER LEVEL
M-2.1	MECHANICAL SCHEDULES & DETAILS
PLUMBING	
P-1.1	PLUMBING SOIL PLAN - LOWER LEVEL
P-1.2	PLUMBING SOIL PLAN - UPPER LEVEL
P-2.1	PLUMBING WATER PLAN - LOWER LEVEL
P-2.2	PLUMBING WATER PLAN - UPPER LEVEL
P-3.1	PLUMBING RISER DIAGRAMS
P-4.1	PLUMBING FIXTURE SCHEDULES
P-4.2	DETAILS
MP1.1	MECHANICAL & PLUMBING SPECIFICATIONS
ELECTRICAL	
E-0.0	ELECTRICAL SYMBOLS, NOTES, & ABBREVIATIONS
E-0.1	ELECTRICAL NOTES
E-0.2	ELECTRICAL SITE PLAN AND DETAILS
E-1.0	LIGHTING PLANS AND DETAILS
E-1.1	LIGHT FIXTURE SCHEDULE, CALCS AND DIAGRAMS
E-1.2	LIGHT FIXTURE CUT SHEETS
E-1.3	LIGHT FIXTURE CUT SHEETS
E-2.0	POWER PLANS & NETWORK DIAGRAM
E-2.1	MECHANICAL POWER PLANS & EQUIPMENT FEEDER SCHEDULE
E-3.0	SYSTEMS PLAN & LEGENDS
E-3.1	LOW VOLTAGE PLANS
E-4.0	ONE LINE DIAGRAM, SCHEDULES, CALCS, & DIAGRAM
E-5.0	DETAILS
E-5.1	DETAILS
CIVIL	
5	UTILITIES AND EASEMENTS PLAN

THIS SET OF DRAWINGS IS BASED ON CUSTOMER SPECIFICATION (NOT A PROTOTYPE)

ABBREVIATIONS

AL.	ALUMINUM
A.F.F.	ABOVE FINISHED FLOOR
BD.	BOARD
BLDG	BUILDING
BLKG	BLOCKING
BRG	BEARING
CAB.	CABINET
CLG.	CEILING
CMU.	CONCRETE MASONRY UNIT
COL.	COLUMN
CON.	CONTRACTOR
CONC.	CONCRETE
CONST.	CONSTRUCTION
CONT.	CONTINUOUS OR CONTINUE
CPT.	CARPET(ED)
CTR.	COUNTER
CT.	CERAMIC TILE
C.J.	CONTROL JOINT
C.O.	CASED OPENING
DIA.	DIAMETER
DIM.	DIMENSION
DISP.	DISPENSER
DIV.	DIVISION
DR.	DOOR
DS.	DOWNSPOUT
DTL.	DETAIL
DWG.	DRAWING
DWR.	DRAWER
EA.	EACH
ELEC.	ELECTRICAL
EL.	ELEVATION
EMER.	EMERGENCY
EQUIP.	EQUIPMENT
EQ.	EQUAL
EXIST.	EXISTING
EXP.	EXPANSION
EXT.	EXTERIOR
E.J.	EXPANSION JOINT
FA.	FIRE ALARM
FD.	FLOOR DRAIN
FE.	FIRE EXTINGUISHER
FIN.	FINISH(ED)
FLR.	FLOOR(ING))
FOC.	FACE OF CONCRETE
FOF.	FACE OF FINISH
FOM.	FACE OF MASONRY
FOS.	FACE OF STUD
FRP.	FIBERGLASS REINFORCED PANEL
FTG.	FOOTING
FT.	FOOT OR FEET
FURR.	FURRED (ING)
F.R.	FIRE RESISTANT
GALV.	GALVANIZED
GA.	GAUGE
GD.	GRADE OR GRADING
GL.	GLASS
GYP.	GYPSUM
G.C.	GENERAL CONTRACTOR
GWB.	GYPSUM WALL BOARD
HC.	HANDICAPPED
HM.	HOLLOW METAL
HORIZ.	HORIZONTAL
ID.	INSIDE DIAMETER
INST.	INSTALLER
INSUL.	INSULATION
INT.	INTERIOR
JT.	JOINT
LAM.	LAMINATE
LAV.	LAVATORY
LL.	LANDLORD
MATL.	MATERIAL
MAX.	MAXIMUM
MDF.	MEDIUM DENSITY FIBER BOARD
MECH.	MECHANICAL
MFG.	MANUFACTURER
MIN.	MINIMUM
MISC.	MISCELLANEOUS
M.O.	MASONRY OPENING
MTL.	METAL
N.I.C.	NOT IN CONTRACT
NOM.	NOMINAL
NTS.	NOT TO SCALE
OA.	OVERALL
OD.	OUTSIDE DIAMETER
OPNG.	OPENING
OPP.	OPPOSITE
O.C.	ON CENTER
PLAM.	PLASTIC LAMINATE
PR.	PAIR
PT.	PAINT
P.T.	PRESSURE TREATED
PWD.	PLYWOOD
QT.	QUARRY TILE
RA.	RETURN AIR
RE.	REFERENCE / REFER TO
RD.	ROOF DRAIN
REFR.	REFRIGERATOR
REINF.	REINFORCE (D) (ING)
REQMTS.	REQUIREMENTS
REQ.	REQUIRED
RES.	RESILIENT
R.O.	ROUGH OPENING
SCH.	SCHEDULE
SC.	SOLID CORE
SEC.	SECTION
SHTG.	SHEATHING
SH.	SHELF
SIM.	SIMILAR
SPEC.	SPECIFICATION
SPK.	SPEAKER
SQ.	SQUARE
S.S.	STAINLESS STEEL
STL..	STEEL
STOR.	STORAGE
SUPP.	SUPPLIER
SUSP.	SUSPENDED
TEL.	TELEPHONE
TEN.	TENANT \ OWNER \ FRANCHISEE
TYP.	TYPICAL
T.C.C.	TENANTS CABINET CONTRACTOR
T.E.C.	TENANT'S ELECTRICAL CONTRACTOR
T.G.C.	TENANTS GENERAL CONTRACTOR
U.O.N.	UNLESS OTHERWISE NOTED
VCT.	VINYL COMPOSITION TILE
VERT.	VERTICAL
VT.	VINYL TILE
V.I.F.	VERIFY IN FIELD
WC.	WATER CLOSET
WD.	WOOD
WWF	WELDED WIRE FABRIC
W/	WITH
W/O	WITHOUT

PROJECT DIRECTORY

PRE-CONSTRUCTION P.M.
Valvoline Instant Oil Change
Name
100 Valvoline Way
Lexington, KY 40509
Bus: Number

CONSTRUCTION P.M
Valvoline Instant Oil Change
Name
100 Valvoline Way
Lexington, KY 40509
Bus: Number

ARCHITECT
Bramic Design Group P.L.L.C.
8003 S. Galileo Ln.
Tucson, AZ 85747
Ph.: 520.401.9183

STRUCTURAL ENGINEER
ennovative Engineering
7850 N. Silverbell Road,
STE 114
Tucson, AZ
Ph.: 907.632.8074

MECHANICAL ENGINEERS
KC Mechanical
5447 E 5th St Ste 112
Tucson, AZ 85711
520.327.7611

ELECTRICAL ENGINEER
Electrical Design Associates, Inc.
7536 North La Cholla Boulevard
Tucson, AZ 85741
520.622.2196

LUBE EQUIP. SUPPLIER
Alemite
7845 Little Ave.
Charlotte, NC 28226
Bus: (800) 233-0400

OWNER
BP GV Partners LLC
20 E Congress St Ste 300
Tucson, AZ 85701

CIVIL ENGINEER
Rick Engineering
3945 E. Fort Lowell Road
Tucson, AZ 85712
520.795.1000

GENERAL NOTES

1. THESE NOTES SHALL APPLY UNLESS OTHERWISE INDICATED BY DRAWINGS OR SPECIFICATIONS.
2. ALL WORK SHALL BE PERFORMED IN STRICT COMPLIANCE WITH ALL APPLICABLE FEDERAL, STATE, & LOCAL CODE REQUIREMENTS, AND IN ACCORDANCE WITH ACCEPTED CONSTRUCTION INDUSTRY STANDARDS.
3. OWNER SHALL OBTAIN & PAY FOR BUILDING & SIGN PERMITS. CONTRACTOR SHALL OBTAIN AND PAY FOR ALL OTHER APPLICABLE PERMITS, INSPECTIONS AND APPROVALS.
4. PRIOR TO TURNING BUILDING OVER TO OWNER, REPAIR/REPLACE ALL MATERIALS, GLASS, OR ASSEMBLIES DAMAGED OR BROKEN DURING CONSTRUCTION.
5. SMOKE DETECTORS SHALL BE HARDWIRED INTO AN AC ELECTRICAL POWER SOURCE AND SHALL BE EQUIPPED WITH BATTERY BACK-UP. SMOKE DETECTORS SHALL BE TESTED FOR COMPLIANCE UPON COMPLETION OF WORK.
6. SEAL ALL PENETRATIONS THRU FLOOR DECK. ALSO REFER TO STRUCTURAL PENETRATION PLAN FOR LOCATIONS
7. FRAMER SHALL PROVIDE IN-WALL BLOCKING AS REQUIRED AT TOILET ACCESSORIES, CABINETS, COUNTERTOPS & ALL AREAS w/ WALL HUNG ITEMS OR AS ALSO CALLED OUT IN THESE DOCUMENTS.
8. FRAMER SHALL PROVIDE 2x_ FIRE BLOCKING @ ALL CONCEALED SPACES OF ALL STUD WALLS @ CEILING LEVEL AND @ 10' INTERVALS AND/OR AS OTHERWISE REQUIRED BY CODE.
9. PROVIDE KNOX-BOX IN ACCORDANCE W/ FIRE DEPARTMENT REQUIREMENTS.
10. ALL CONCRETE SLAB TO BUILDING JOINTS ARE TO BE PROVIDED WITH SEALANT AND BACKER ROD.
11. DIMENSIONS NOTED ON PLANS ARE TO THE OUTSIDE FACE OF WD. STUD FRAMING UNLESS NOTED OTHERWISE.
12. GENERAL CONTRACTOR SHALL PROVIDE ALL TEMPORARY UTILITIES NECESSARY/REQUIRED UNTIL PROJECT COMPLETION.

PRODUCT SUBMITTALS

DIVISION 03 - CONCRETE		(REQUIRED)
03200	CONCRETE REINFORCEMENT	
03300	CAST-IN-PLACE CONCRETE	
DIVISION 04 - MASONRY		(NOT REQUIRED - AS SPECIFIED)
DIVISION 05 - METALS		(REQUIRED)
05120	STRUCTURAL STEEL	
05210	STEEL JOISTS	(WHERE OCCURS)
05310	STEEL DECK	
05500	METAL FABRICATIONS	
05600	MISCELLANEOUS METAL WORK	
DIVISION 06 - WOOD AND PLASTICS		(REQUIRED)
06175	OPEN WEB TRUSSES	
DIVISION 07 - THERMAL AND MOISTURE PROTECTION		(NOT REQUIRED - AS SPECIFIED)
DIVISION 08 - OPENINGS		(NOT REQUIRED - AS SPECIFIED)
DIVISION 09 - FINISHES		(NOT REQUIRED - AS SPECIFIED)
DIVISION 10 - SPECIALTIES		(NOT REQUIRED - AS SPECIFIED)
DIVISION 11 - EQUIPMENT		(NOT REQUIRED - AS SPECIFIED)
DIVISION 22 - PLUMBING		(NOT REQUIRED - AS SPECIFIED)
DIVISION 23 - HVAC		(NOT REQUIRED - AS SPECIFIED)
DIVISION 26 - ELECTRICAL		(NOT REQUIRED - AS SPECIFIED)
DIVISION 27 - COMMUNICATIONS		(NOT REQUIRED - AS SPECIFIED)
DIVISION 31 - EARTHWORK		(NOT REQUIRED - AS SPECIFIED)
DIVISION 32 - EXTERIOR IMPROVEMENTS		(NOT REQUIRED - AS SPECIFIED)
DIVISION 33 - UTILITIES		(NOT REQUIRED - AS SPECIFIED)

SPECIAL PHOTOGRAPHIC REQ.

THE FOLLOWING IS A LIST OF PHOTOGRAPHS THAT SHALL BE TAKEN BY THE GENERAL CONTRACTOR DURING THE COURSE OF CONSTRUCTION. THESE PHOTOS SHALL BE TAKEN AT APPROPRIATE INTERVALS AND SHALL BE DELIVERED TO VIOC CONSTRUCTION REPRESENTATIVES ON A WEEKLY BASIS AND SHALL BE TRANSMITTED ELECTRONICALLY VIA E-MAIL. THE PURPOSE OF THESE PHOTOGRAPHS IS TO DOCUMENT CONSTRUCTION. DISTRIBUTION AND/OR REVIEW OF SUCH PHOTOS TO/BY THE OWNER SHALL NOT IN ANY WAY BE MISCONSTRUED AS ACCEPTANCE OF COMPLETED WORK AND DOES NOT RELIEVE THE CONTRACTOR OF HIS RESPONSIBILITY TO COMPLY FULLY WITH THE REQUIREMENTS SET FORTH IN THE CONTRACT DOCUMENTS. FAILURE TO TAKE THESE PHOTOGRAPHS OR FOLLOW THESE PROCEDURES MAY RESULT IN REMOVAL OF IN-PLACE WORK, PHOTOGRAPHIC DOCUMENTATION, AND REPLACEMENT OF WORK AT THE SOLE EXPENSE OF THE GENERAL CONTRACTOR WITHOUT DETRIMENTALLY IMPACTING THE SCHEDULED DATE FOR COMPLETION.

GENERAL WEEKLY PHOTOS
- OVERALL SITE PHOTOS FROM SEVERAL CONSISTENT VANTAGE POINTS
- PHOTOS IN EACH ROOM FROM OPPOSITE SIDES OF EACH ROOM
- DETAILED PHOTOS OF ISSUES TO BE RESOLVED
- DETAILED PHOTOS OF WORK ACCOMPLISHED IN THE PAST WEEK

SPECIFIC DETAIL PHOTOS
- SITE UTILITIES PRIOR TO BACKFILLING
- ALL DOUBLE CLEANOUTS INCLUDING AREA SHOTS TO INDICATED LOCATIONS
- ALL TRENCHES DURING THE BACKFILL PROCESS
- ALL ASPHALT BASE, BASE COURSE, AND TOP COURSE THICKNESS
- ALL PAVING, FOUNDATION, AND SLAB POURS JUST PRIOR TO CONCRETE PLACEMENT
- PAVING, FOUNDATION, AND SLAB STEEL PLACEMENT IN VARIOUS LOCATIONS AROUND THE BUILDING
- UNDER SLAB WATERPROOFING & VAPOR BARRIER INSTALLATIONS
- FOUNDATION WATERPROOFING FROM FOOTING TO TOP OF FLOOR
- LIGHT POLE BASES PRIOR TO CONCRETE PLACEMENT INCLUDING STEEL AND BOLTS
- UNDERGROUND PLUMBING INSIDE THE BUILDING
- SUMP(S) IN PLACE PRIOR TO BACKFILL INCLUDING CONNECTIONS
- BACK FILL PROCESS FOR SUMP(S)
- GLASS INSTALLATION DETAILS AT ALL STAGES INCLUDING:
  FLASHING UNDER SILL RECEPTOR, SILL RECEPTOR IN PLACE, END DAMS SEALED ON SILL RECEPTOR, LAPS (IF REQUIRED) IN SILL RECEPTOR, SHIMS (UNDER SILL), PROPER JAMB AND HEAD GAPS
- ALL WALLS PRIOR TO SHEETROCK INSTALLATION SHOWING ALL BLOCKING, PLUMBING, STRUCTURAL CONNECTS AT BOTTOM AND TOP PLATES, WALL ANCHORS, ELECTRICAL CONDUIT, AND INSULATION AT A MINIMUM.
- RESTROOM PRIOR TO FINISHES TO SHOW WALLBOARD AND TILE BACKER.
- PAINT BUCKETS INDICATING MANUFACTURER AND PAINT TYPE SHOWN ON JOB SITE.

BRAMIC DESIGN GROUP PLLC
8003 S. GALILEO LN.
TUCSON, AZ 85747
PHONE: (520) 401-9183

COPYRIGHT NOTICE
This drawing is the property of the above referenced Professional and is not to be used for any purpose other than the specific project and site names herein, and cannot be reproduced in any manner without the express written permission from the Professional.

DATE	ISSUE
05.17.24	ISSUED FOR PERMIT REVIEW SET

	DATE	REVISION
1	07.08.24	C.O.T. COMMENTS

PROFESSIONAL SEAL
REGISTERED ARCHITECT CERTIFICATE NO. 15939 GENE GOLDSTEIN Date Signed 05.17.24 ARIZONA U.S.A. Expires 12.31.25

PROFESSIONAL LICENSE NO:
ARIZONA 15939
CERTIFICATE OF AUTHORIZATION NO:

PROFESSIONAL IN CHARGE
GENE GOLDSTEIN

PROJECT MANAGER
KYLE VILAUBI

QUALITY CONTROL
KYLE VILAUBI, GENE GOLDSTEIN

DRAWN BY
KYLE VILAUBI / JON WADE

PROJECT ADDRESS
2920 S. PARK AVE
TUCSON ARIZONA 85713

VALVOLINE INSTANT OIL CHANGE

BDG PROJECT NUMBER
23-849

SHEET NAME
COVER SHEET

SHEET #
CS-1

STONE- HARDIE PANEL OPTION

13-07-2023 17:28:22 BIM 360://VIOC Proto/3BLH-AZ Arch.rvt

Project Code Review:

Project description:	New Valvoline Instant Oil Change Building
Zone:	I-1
Area calculations:	
Total	3,539 SF (Basement and grade level)
Occupancy type: Sect. 304 & 309	S-1 Storage (motor vehicle repair garage)
Type of construction:	Type VB - Non sprinklered
Building Height:	
Table 504.3	
Allowable:	40' and one story above grade max.
Proposed:	25'-3" +/-
No. of stories:	
Sect. 504.4	
Allowable:	One story above grade max. with basement
Proposed:	1 (one) story
Allowable area:	
Section 506.2	
Allowable:	9,000 SF (Not sprinklered)
Proposed:	3,539 SF
Mixed use occupancy:	
Sect. 506.2.4	No separation is required between accessory occupancies and the main occupancy (table 508.4)
Construction type: Sect. 602.5	Type VB
Occupant loads Building:	
Table 1004.5	

Occupant Load - Lower Level:

Lube Pit (Storage / Mechanical):	1,577 S.F./300(Gross)	= 5
Utility Room / Closet:	83 S.F./300(Gross)	= 1
Total Occupant Load:	1,660 S.F. (Gross)	= 6 OCC.

Occupant Load - Upper Level:

Service Bays:	1,343 S.F./300 (Gross)	= 4.5
Office / Restroom / Waiting (Business):	190 S.F./100 (Gross)	= 1.9
Storage / Utility:	346 S.F./300 (Gross)	= 1.2
Total Occupant Load:	1,879 S.F. (GROSS)	= 7.6 OCC.

Occupant Load - Total:

Lower level + Upper Level:	3,539 S.F.	= 14 OCC.

Exiting: Sect. 1006	1 exit required 3 exits provided
Parking:	Refer to development plan
Plumbing fixtures:	
Sect. 2902.1.1 & 2902.2	
S-1 - 1 per 100	Based on 14 occupants 7 Women; 7 Men
Water closets	Required – 1 Provided – 1
Lavatories - 1 per 200	Required – 1 Provided – 1
Mop sink	Required – 1 Provided – 1 Service sink
Drinking fountain	
S-1 - 1 per 1000	14 occupants Required – 1 Provided – 1

Applicable Codes

CODE	TITLE	EDITION	LOCAL AMEND.
BUILDING CODE	INTERNATIONAL BUILDING CODE	2018	YES
ACCESSIBILITY CODE	ANSI 117.1-2009		
MECHANICAL CODE	INTERNATIONAL MECHANICAL CODE	2018	YES
ELECTRICAL CODE	NATIONAL ELECTRIC CODE	2017	YES
PLUMBING CODE	INTERNATIONAL PLUMBING CODE	2018	YES
FIRE PREVENTION CODE	INTERNATIONAL FIRE CODE	2018	YES
ZONING CODE	UNIFORM DEVELOPMENT CODE		
ENERGY CODE	INT'L ENERGY CONSERVATION CODE	2018	YES

BRAMIC DESIGN GROUP PLLC
8003 S. GALILEO LN.
TUCSON, AZ 85747
PHONE: (520) 401-9183

COPYRIGHT NOTICE
This drawing is the property of the above referenced Professional and is not to be used for any purpose other than the specific project and site names herein, and cannot be reproduced in any manner without the express written permission from the Professional.

DATE	ISSUE
05.17.24	ISSUED FOR PERMIT REVIEW SET

	DATE	REVISION
1	07.08.24	C.O.T. COMMENTS

PROFESSIONAL SEAL

REGISTERED ARCHITECT
CERTIFICATE NO.
15939
GENE
GOLDSTEIN
Date Signed 05.17.24
ARIZONA U.S.A.
Expires 12.31.25

PROFESSIONAL LICENSE NO:
ARIZONA 15939
CERTIFICATE OF AUTHORIZATION NO:

PROFESSIONAL IN CHARGE
GENE GOLDSTEIN

PROJECT MANAGER
KYLE VILAUBI

QUALITY CONTROL
KYLE VILAUBI, GENE GOLDSTEIN

DRAWN BY
KYLE VILAUBI / JON WADE

PROJECT ADDRESS
2920 S. PARK AVE
TUCSON ARIZONA 85713

VALVOLINE INSTANT OIL CHANGE

BDG PROJECT NUMBER
23-849

SHEET NAME
COVER SHEET 2

SHEET #
CS-2

STONE- HARDIE PANEL OPTION

5/07/2024 17:28:22 BIM 360://VOC Project/BLHAZ Arch.rvt

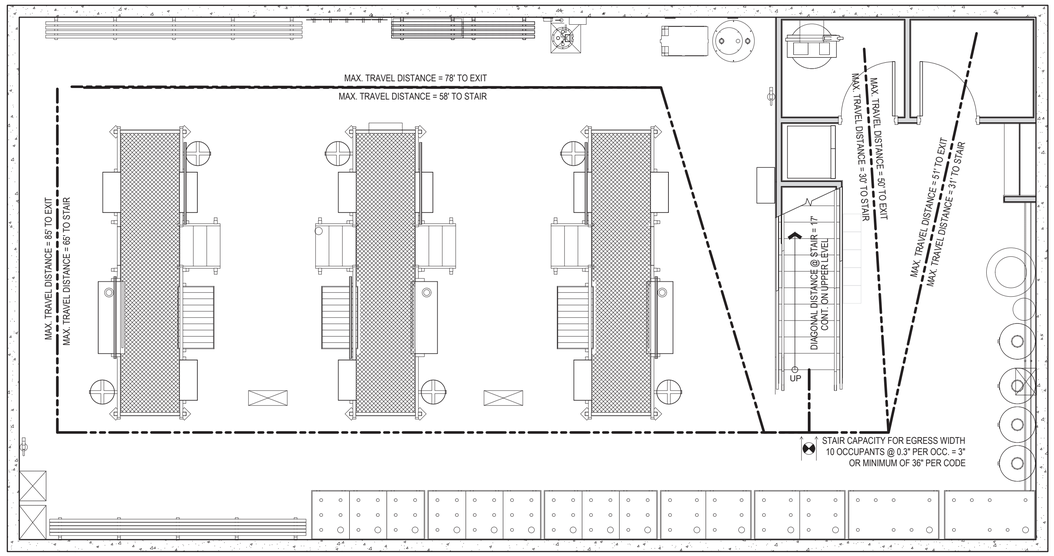

1 G-1.1 LIFE SAFETY PLAN - LOWER LEVEL
Scale: 1/4" = 1'-0"

N

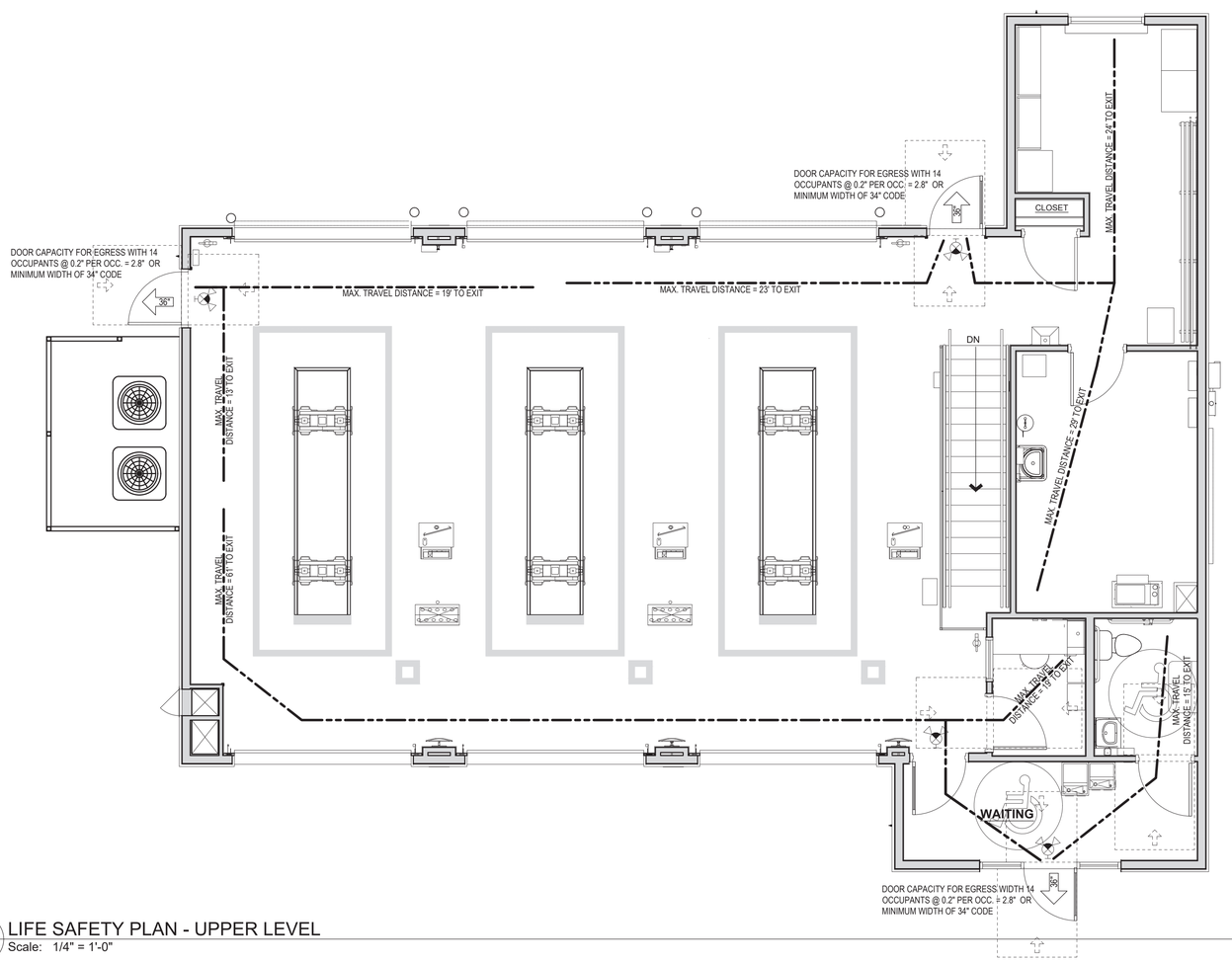

2 G-1.1 LIFE SAFETY PLAN - UPPER LEVEL
Scale: 1/4" = 1'-0"

N

LEGEND

- MINIMUM 3'-0" WIDE CLEAR PATH OF EGRESS TRAVEL
- EXIT SIGN - ILLUMINATED
- EXIT SIGN W/ DUAL EMERGENCY LIGHT - ILLUMINATED
- DUAL HEAD EMERGENCY LIGHT W/ BATTERY
- F.E. FIRE EXTINGUISHER - MAX. 75' SEPARATION BETWEEN FIRE EXTINGUISHERS TYP.

NOTES

1. PER BUILDING CODE SECTION 903.2.9 GROUP S-1, AN AUTOMATIC SPRINKLER SYSTEM IS NOT REQUIRED BASED ON THIS BUILDING NOT MEETING ANY OF THESE CONDITIONAL REQUIREMENTS (1 THRU 5). ALSO, PER SECTION 903.2.9.1 REPAIR GARAGES, A SYSTEM IS NOT REQUIRED BASED ON ANY OF THESE CONDITIONS.
2. PER BUILDING CODE TABLE 1006.2.1, THE MAXIMUM COMMON PATH OF TRAVEL IS 100'-0" FOR A NON-SPRINKLERED S USE WITH LESS THAN OR EQUAL TO 30 OCCUPANTS.
3. GENERAL CONTRACTOR WILL FURNISH AND INSTALL FIRE EXTINGUISHERS AS SCHEDULED WITH MOUNTING BRACKETS AND ACCESSORIES AT 4'-0" A.F.F. OR AS REQUIRED BY GOVERNMENTAL AUTHORITIES. MAXIMUM TRAVEL DISTANCE OF 75'-0" FOR PLACEMENT OR WHERE MORE STRINGENT PER LOCAL JURISDICTIONS. BOTTOM OF FIRE EXTINGUISHERS SHALL BE NO HIGHER THAN 27" AFF.
4. GENERAL CONTRACTOR/OWNER TO PROVIDE ALL REQUIRED PLACARDS PER LOCAL JURISDICTIONS. PROVIDE LAMINATED VINYL ARROW SIGN AT EACH EXTINGUISHER. ALL EXTINGUISHERS SHALL CARRY AN EXPIRATION DATE OF ONE YEAR BEYOND THE DATE OF BUILDING TURNOVER. LOCATIONS SHOWN ON DRAWINGS ARE FOR GENERAL REPRESENTATION, G.C. SHALL COORDINATE ACTUAL PLACEMENT OF FIRE EXTINGUISHERS WITH FIRE MARSHALL.
5. VEHICLE FUEL SYSTEMS ARE NOT SERVICED IN THIS FACILITY. IN THE CASE A FUEL SYSTEM IS IN NEED OF REPAIR, EMPLOYEES ARE TO INSTRUCT VEHICLE OWNERS TO TAKE THE VEHICLE TO A LOCAL REPAIR STATION OFF PREMISES.

CODE INFORMATION

CODE: 2018 INTERNATIONAL BUILDING CODE (IBC)
2018 INTERNATIONAL MECHANICAL CODE
2018 INTERNATIONAL ENERGY CONSERVATION CODE/ASHRAE 90.1-2010
2018 INTERNATIONAL PLUMBING CODE
2018 INTERNATIONAL FIRE CODE
2017 NATIONAL ELECTRICAL CODE (NEC)

OCCUPANCY CLASSIFICATION:	S-1 STORAGE (MOTOR VEHICLE REPAIR GARAGE)
CONSTRUCTION TYPE:	V-B
ALLOWABLE BUILDING HEIGHT:	40 FT. AND ONE STORY ABOVE GRADE MAX.
ACTUAL BUILDING HEIGHT:	± 25'-3"
BUILDING ALLOWABLE AREA:	9,000 S.F./STORY
ACTUAL BUILDING AREA:	2,003 S.F. - UPPER LEVEL (EXTERIOR F.O. BUILDING)

OCCUPANT LOAD - LOWER LEVEL:

LUBE PIT (STORAGE/MECHANICAL):	1,577 S.F./300(GROSS)		= 5
UTILITY ROOM / CLOSET:	83 S.F./300(GROSS)		= 1
TOTAL OCCUPANT LOAD:	1,660 S.F.	(GROSS)	= 6 OCC.

OCCUPANT LOAD - UPPER LEVEL:

SERVICE BAYS:	1,343 S.F./300(GROSS)		= 4.5
OFFICE / RESTROOM / WAITING (BUSINESS):	190 S.F./100(GROSS)		= 1.9
STORAGE / UTILITY:	346 S.F./300(GROSS)		= 1.2
TOTAL OCCUPANT LOAD:	1,879 S.F.	(GROSS)	= 7.6 OCC.

OCCUPANT LOAD - TOTAL:
LOWER LEVEL + UPPER LEVEL: 3,539 S.F. = 14 OCC.

AREA SUMMARY

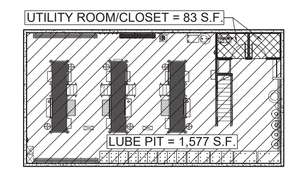

AREA DIAGRAM - LOWER LEVEL

N

1,660 S.F. GROSS (INSIDE FACE OF EXTERIOR WALLS)
GROSS AREA = FIRE AREA

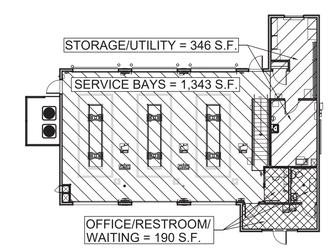

AREA DIAGRAM - UPPER LEVEL

N

1,879 S.F. GROSS (INSIDE FACE OF EXTERIOR WALLS INCLUSIVE OF SHAFTS)
GROSS AREA = FIRE AREA

- S-1 (STORAGE) OCCUPANCY
- B (BUSINESS) OCCUPANCY
- SHAFTS

BRAMIC DESIGN GROUP PLLC
8003 S. GALILEO LN.
TUCSON, AZ 85747
PHONE: (520) 401-9183

COPYRIGHT NOTICE
This drawing is the property of the above referenced Professional and is not to be used for any purpose other than the specific project and site names herein, and cannot be reproduced in any manner without the express written permission from the Professional.

DATE	ISSUE
05.17.24	ISSUED FOR PERMIT REVIEW SET

DATE	REVISION
07.08.24	C.O.T. COMMENTS

PROFESSIONAL SEAL

REGISTERED ARCHITECT CERTIFICATE NO. 15939 GENE GOLDSTEIN Date Signed 05.17.24 ARIZONA U.S.A. Expires 12.31.25

PROFESSIONAL LICENSE NO:
ARIZONA 15939
CERTIFICATE OF AUTHORIZATION NO:

PROFESSIONAL IN CHARGE
GENE GOLDSTEIN

PROJECT MANAGER
KYLE VILAUBI

QUALITY CONTROL
KYLE VILAUBI, GENE GOLDSTEIN

DRAWN BY
KYLE VILAUBI / JON WADE

PROJECT ADDRESS
2920 S. PARK AVE
TUCSON ARIZONA 85713

Valvoline Instant Oil Change

VALVOLINE INSTANT OIL CHANGE

BDG PROJECT NUMBER
23-849

SHEET NAME
LIFE SAFETY PLAN

SHEET #
G-1.1

STONE- HARDIE PANEL OPTION

13-07-2023 17:28:27 BIM 360 / VVOC Project/BLH-A2 Arch.rvt

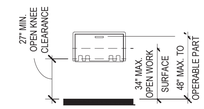

BABY CHANGING STATION

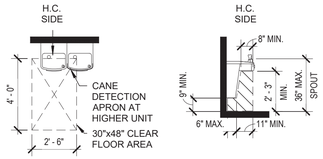

DRINKING FOUNTAIN

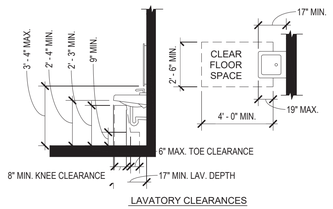

LAVATORY CLEARANCES

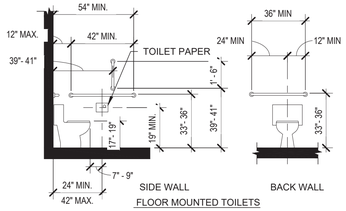

SIDE WALL FLOOR MOUNTED TOILETS BACK WALL

ACCESSIBILITY CLEARANCE

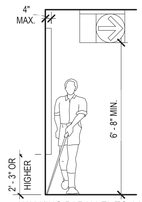

WALKING PARALLEL TO A WALL

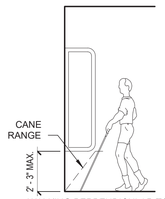

WALKING PERPENDICULAR TO A WALL

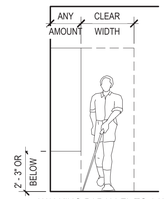

WALKING PARALLEL TO A WALL

PROTRUDING OBJECTS

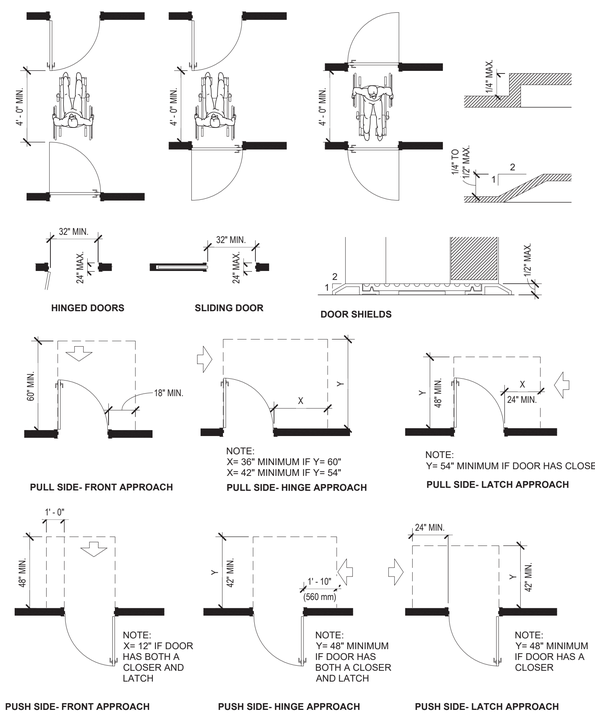

HINGED DOORS

SLIDING DOOR

DOOR SHIELDS

PULL SIDE- FRONT APPROACH

NOTE:
X= 36" MINIMUM IF Y= 60"
X= 42" MINIMUM IF Y= 54"

PULL SIDE- HINGE APPROACH

NOTE:
Y= 54" MINIMUM IF DOOR HAS CLOSER

PULL SIDE- LATCH APPROACH

NOTE:
X= 12" IF DOOR HAS BOTH A CLOSER AND LATCH

PUSH SIDE- FRONT APPROACH

NOTE:
Y= 48" MINIMUM IF DOOR HAS BOTH A CLOSER AND LATCH

PUSH SIDE- HINGE APPROACH

NOTE:
Y= 48" MINIMUM IF DOOR HAS A CLOSER

PUSH SIDE- LATCH APPROACH

ACCESSIBLE DOOR REQUIREMENTS

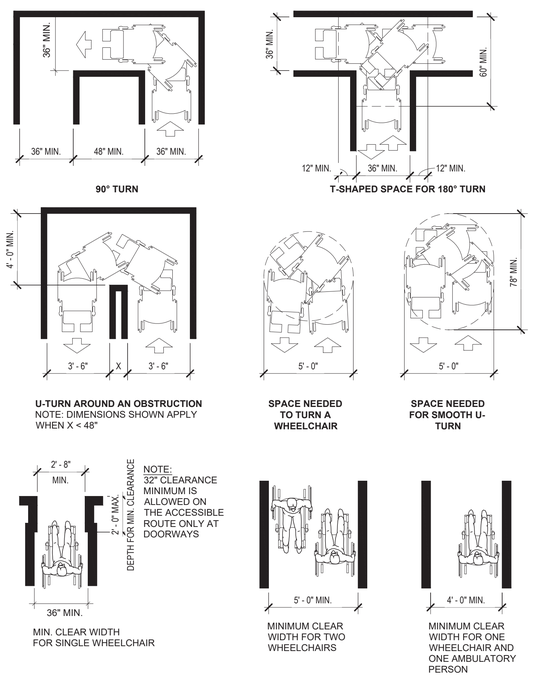

90° TURN

T-SHAPED SPACE FOR 180° TURN

U-TURN AROUND AN OBSTRUCTION
NOTE: DIMENSIONS SHOWN APPLY WHEN X < 48"

SPACE NEEDED TO TURN A WHEELCHAIR

SPACE NEEDED FOR SMOOTH U-TURN

NOTE:
32" CLEARANCE MINIMUM IS ALLOWED ON THE ACCESSIBLE ROUTE ONLY AT DOORWAYS

MIN. CLEAR WIDTH FOR SINGLE WHEELCHAIR

MINIMUM CLEAR WIDTH FOR TWO WHEELCHAIRS

MINIMUM CLEAR WIDTH FOR ONE WHEELCHAIR AND ONE AMBULATORY PERSON

PATH OF TRAVEL

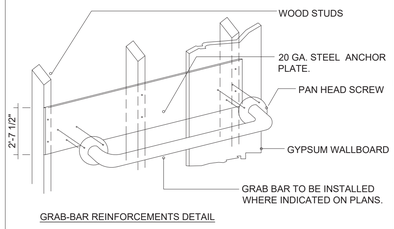

GRAB-BAR REINFORCEMENTS DETAIL

REINFORCEMENT DETAIL

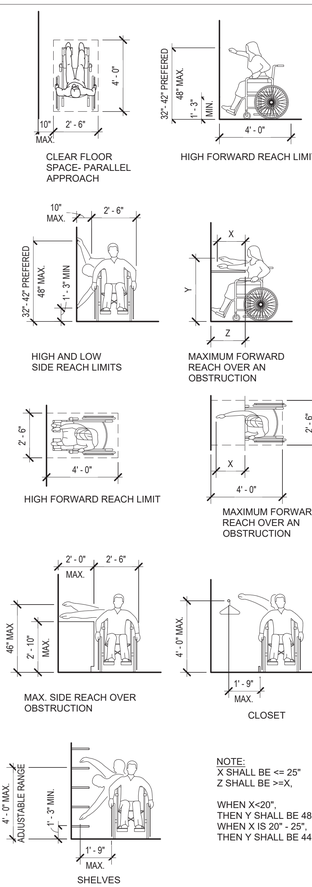

CLEAR FLOOR SPACE- PARALLEL APPROACH

HIGH FORWARD REACH LIMIT

HIGH AND LOW SIDE REACH LIMITS

MAXIMUM FORWARD REACH OVER AN OBSTRUCTION

HIGH FORWARD REACH LIMIT

MAXIMUM FORWARD REACH OVER AN OBSTRUCTION

MAX. SIDE REACH OVER OBSTRUCTION

CLOSET

SHELVES

NOTE:
X SHALL BE <= 25"
Z SHALL BE >=X,

WHEN X<20",
THEN Y SHALL BE 48" MAX
WHEN X IS 20" - 25",
THEN Y SHALL BE 44" MAX

ACCESSIBLE REACH

STONE- HARDIE PANEL OPTION

BRAMIC DESIGN GROUP PLLC
8003 S. GALILEO LN.
TUCSON, AZ 85747
PHONE: (520) 401-9183

COPYRIGHT NOTICE
This drawing is the property of the above referenced Professional and is not to be used for any purpose other than the specific project and site names herein, and cannot be reproduced in any manner without the express written permission from the Professional.

DATE	ISSUE
05.17.24	ISSUED FOR PERMIT REVIEW SET

DATE	REVISION
07.08.24	C.O.T. COMMENTS

PROFESSIONAL SEAL

REGISTERED ARCHITECT CERTIFICATE NO. 15939 GENE GOLDSTEIN ARIZONA U.S.A. Expires 12.31.23

PROFESSIONAL LICENSE NO:
ARIZONA 15939
CERTIFICATE OF AUTHORIZATION NO:

PROFESSIONAL IN CHARGE
GENE GOLDSTEIN

PROJECT MANAGER
KYLE VILAUBI

QUALITY CONTROL
KYLE VILAUBI, GENE GOLDSTEIN

DRAWN BY
KYLE VILAUBI / JON WADE

PROJECT ADDRESS
2920 S. PARK AVE
TUCSON ARIZONA 85713

Valvoline Instant Oil Change

VALVOLINE INSTANT OIL CHANGE

BDG PROJECT NUMBER
23-849

SHEET NAME
ADA STANDARDS

SHEET #
G-2.1

BIM 360:IVOC Proto-05L1-A-Z Arch.rvt
13-07-2023 17:28:30

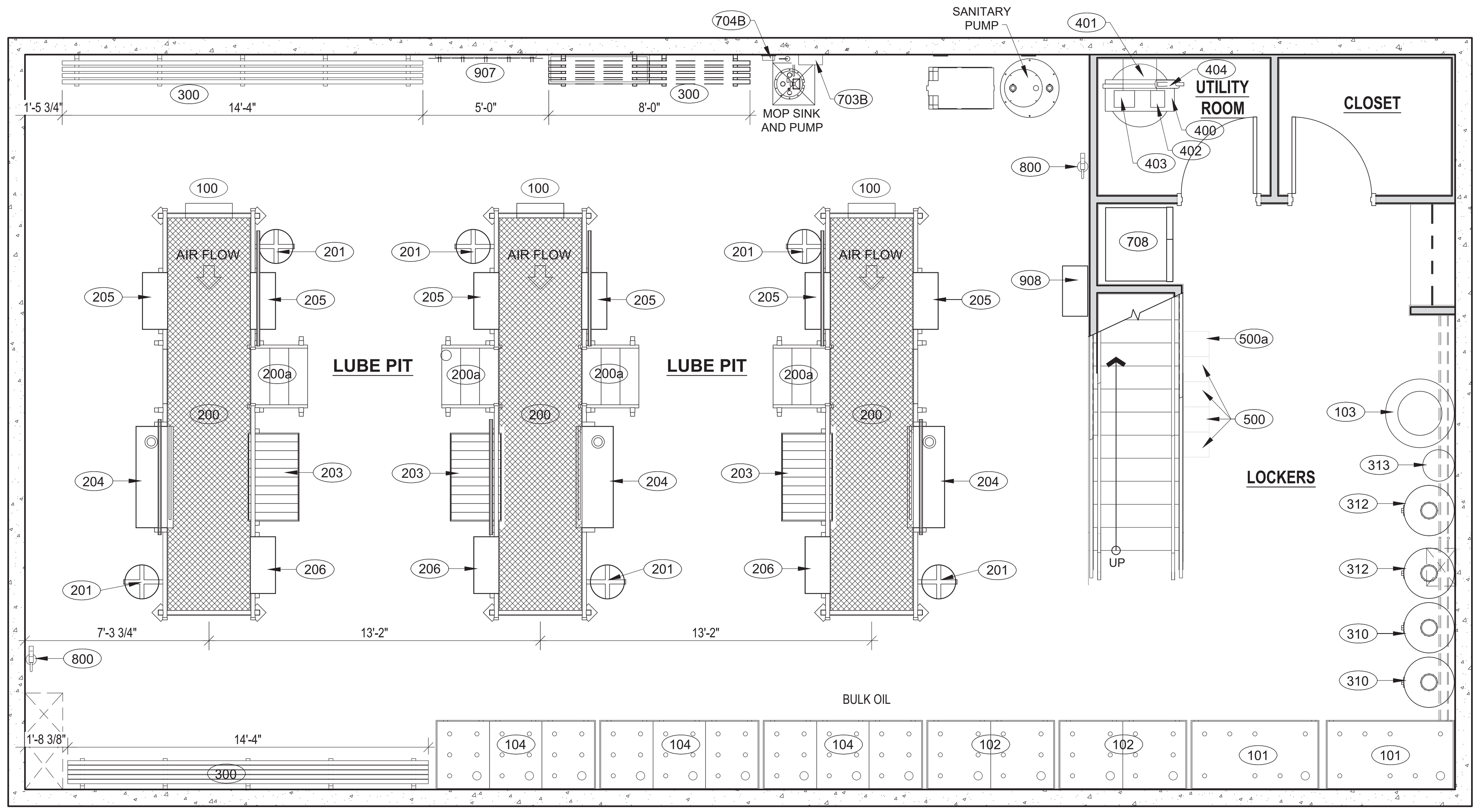

1 G-3.1 OPERATIONS PLAN - LOWER LEVEL
Scale: 1/4" = 1'-0"

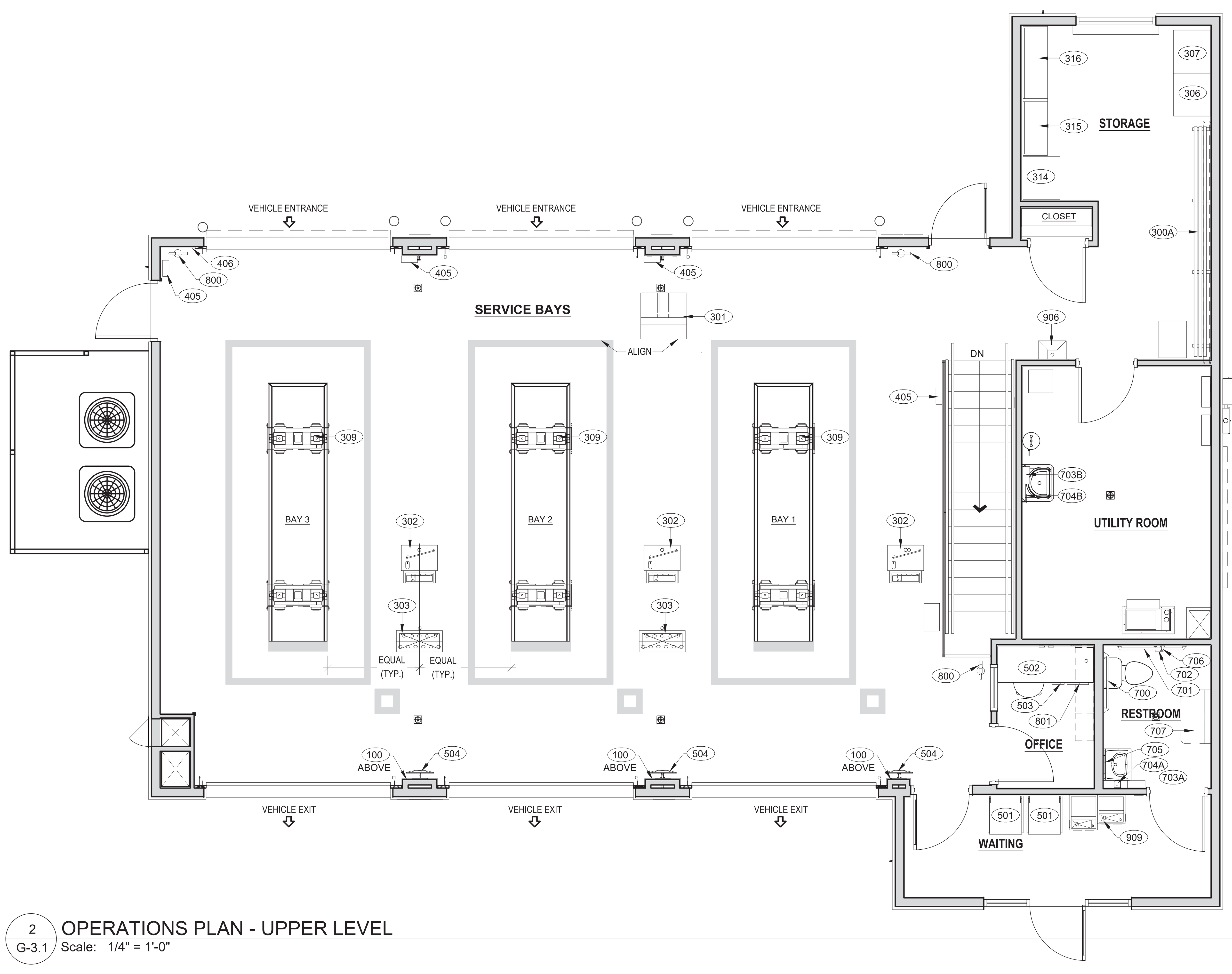

2 G-3.1 OPERATIONS PLAN - UPPER LEVEL
Scale: 1/4" = 1'-0"

EQUIPMENT SCHEDULE

ITEM #	DESCRIPTION	QUANTITY	MANUFACTURER	MODEL #	SUPPLIED BY	INSTALLED BY	COMMENTS
100	20" WORK STATION FAN	6	DAYTON	#61LD80	GC	GC	GC TO PROVIDE BLOCKING IN WALL AS REQUIRED. COORDINATE WITH ELECTRICAL
101	500 GAL TOTAL SINGLE WALL 1-COMPARTMENT TANK	2		SR-500	OWNER	GC	PER UL 142 SPECIFICATIONS GC SHALL RECEIVE, SET AND VENT TANKS
102	500 GAL TOTAL SINGLE WALL 2-COMPARTMENT TANK	2		SR-500 50/50	OWNER	GC	PER UL 142 SPECIFICATIONS GC SHALL RECEIVE, SET AND VENT TANKS
103	200 GAL TANK - WASTE ANTIFREEZE	1			OWNER	GC	
104	600 GAL TOTAL SINGLE WALL 3 COMPARTMENT TANK	3		SR-600 33/33/33	OWNER	GC	PER UL 142 SPECIFICATIONS GC SHALL RECEIVE, SET AND VENT TANKS
200	VIOC CATWALK	4	DEVON INDUSTRIES	E-915	OWNER	DEVON	
200a	CATWALK STEPS	4	DEVON INDUSTRIES		DEVON	DEVON	
201	DRUM SUPPORT BRACKET	6	DEVON INDUSTRIES	E903-B	OWNER	DEVON	
~~202~~	~~DRIP CATCH PAN~~	~~3~~	~~DEVON INDUSTRIES~~	~~E903-DP~~	~~OWNER~~	~~DEVON~~	~~NOT SHOWN ON PLAN~~
203	OIL FILTER DISPENSER RACK	3	DEVON INDUSTRIES	E-304	OWNER	DEVON	
204	TECHNICIAN TOOL SHELF	3	DEVON INDUSTRIES	E500-2H	OWNER	DEVON	
205	UTILITY SHELF (2-TIER)	6	DEVON INDUSTRIES	E-300-2	OWNER	DEVON	M-307 MOLDED RUBBER BUMPER BOTH BOTTOM CORNERS
206	UTILITY SHELF (3-TIER)	3	DEVON INDUSTRIES	E-300-3	OWNER	DEVON	M-307 MOLDED RUBBER BUMPER BOTH BOTTOM CORNERS
~~207A~~	~~TECHNICIAN STEP STOOL - LOWER LEVEL~~	~~3~~	~~COTTERMAN~~	~~LOWER LEVEL:~~ A2N2222A320B8C2 P6-D99990001	~~OWNER~~	~~GC~~	~~NOT SHOWN ON PLAN. ONE AT EACH CATWALK~~
~~207B~~	~~TECHNICIAN STEP STOOL - UPPER LEVEL~~	~~1~~	~~COTTERMAN~~	~~UPPER LEVEL:~~ A1N2222A320B8C2 P6-D99990010	~~OWNER~~	~~GC~~	~~NOT SHOWN ON PLAN.ONE AT UPPER LEVEL~~
300	INVENTORY SHELVING	3	DEVON INDUSTRIES	E-601	OWNER	DEVON	SEE PLANS TO DETERMINE LINEAR FOOTAGE NEEDED
300A	INVENTORY SHELVING	1	DEVON INDUSTRIES	E-601 (1'-0" DEPTH)	OWNER	DEVON	SEE PLANS TO DETERMINE LINEAR FOOTAGE NEEDED
301	CASHIER/ COMPUTER STATION W/ DOORS	1	DEVON INDUSTRIES	C7030-DX	OWNER	DEVON	BLACK
302	PEDESTAL POST PODIUM	3	DEVON INDUSTRIES	CP-09	OWNER	DEVON	
303	LUBE DISPENSING CONSOLE 11 DISPENSERS	2	DEVON INDUSTRIES	E101	OWNER	DEVON	REQUIRES 26"x10" FLOOR OPENING. HOSE GUIDES INCLUDED W/ UNIT (BY GC)
~~304~~	~~ROLLING DRAIN PAN~~	~~3~~	~~DEVON INDUSTRIES~~	~~E203~~	~~OWNER~~	~~DEVON~~	~~NOT SHOWN ON PLAN~~
~~305~~	~~PIT BULL SAFETY NET~~	~~3~~	~~BRW UNLIMITED SERVICES,~~ INC.	~~PITBULL~~	~~OWNER~~	~~GC~~	~~OPTIONAL #305 PIT COVER VERIFY W/ OWNER REP.~~
306	AUTOMATIC TRANSMISSION FLUID EXCHANGER	1	RTI		OWNER	OWNER	
307	ANTIFREEZE DRAIN AND FILL SYSTEM	1	ADVANTAGE ENGINEERING COMPANY	CE2000	OWNER	OWNER	
~~308~~	~~OIL EVACUATION MACHINE~~	~~1~~	~~JOHNDOW INDUSTRIES~~	~~JDI-20EV-BV~~	~~OWNER~~	~~OWNER~~	
309	ROLLING PIT JACK	3	DEVON	RPJ6K	DEVON	DEVON	
310	WINDSHIELD WASHER FLUID TANK	2	VISIBLE SOLUTIONS		OWNER	OWNER	105 GALLON TANK
~~311~~	~~OIL DISPENSING BAR~~	~~1~~			~~OWNER~~	~~DEVON~~	
312	ANTIFREEZE TANK	2			OWNER	GC	105 GALLON TANK W/ PNUEMATIC PUMP
313	GEAR OIL CANISTER	1			OWNER	GC	
314	A/C MACHINE	1			OWNER	OWNER	
315	BATTERY DISPLAY SHELVING - 3'-0"	1			OWNER	OWNER	
316	USED BATTERY STORAGE - 4'-0"	1			OWNER	OWNER	
~~317~~	~~WINDSHIELD WIPER DISPLAY~~	~~2~~			~~OWNER~~	~~OWNER~~	
400	AIR COMPRESSOR - 120 GAL VERTICAL TANK	1	CHAMPION	SINGLE PHASE CHP-VR5-12-1-208V	OWNER	GC	WIRING BY GC, VIBRATION ISOLATION DAMPERS ON COMPESSOR SHALL BE INSTALLED BY ZONES (AIR COMPRESSOR SUPPLIED WITH OPTIONAL SIMPLEX CONTROL PANEL)
401	AIR DRYER	1	DEVON		OWNER	DEVON	
402	ELECTRONIC TIMER DRAIN VALVE SYSTEM	1	AIRCEL		OWNER	OWNER	INSTALL ON BOTTOM OF AIR COMPRESSOR
403	HOSE GUIDE ASSEMBLY	3	ALEMITE		OWNER	DEVON	
404	HOSE REEL	1	ALEMITE		OWNER	DEVON	
405	AUTOMATIC TIRE INFLATOR	4	HALTEC CORPORATION	89-XDA-VAV	OWNER	HALTEC	(1) STAND; ALL OTHERS WALL MOUNTED; PEX PIPING
406	SERVICE BELL RINGER	1	MILTON	#805	OWNER	GC	100' HOSE
500	LOCKERS	4			OWNER	GC	SECURE TO WALL PER MANUFACTURER'S RECOMMENDATIONS
500a	DIRTY UNIFORM CABINET	1			OWNER	GC	SECURE TO WALL PER MANUFACTURER'S RECOMMENDATIONS
501	WAITING ROOM CHAIRS	2			OWNER	OWNER	
502	OFFICE DESK AND CHAIR	1					
503	SECURITY CABINET	1	MIER PRODUCTS	BW-224	OWNER	GC	
504	RECTANGULAR CONVEX MIRROR	3	GRAINGER	1CYZ1	OWNER	GC	MIRRORS TO BE INSTALLED ONLY IN STORES THAT ARE PROVIDING INSPECTION SERVICES. GC TO CONFIRM WITH OWNER. PROVIDE SOLID BLOCKING IN WALL AS REQUIRED TO MOUNT MIRROR TO WALL.
700	36" HORIZONTAL GRAB BAR	1	BOBRICK	B6806X36	GC	GC	
701	42" HORIZONTAL GRAB BAR	1	BOBRICK	B6806X42	GC	GC	
702	TOILET PAPER HOLDER	1	BOBRICK	B-685	GC	GC	
703A	PAPER TOWEL DISPENSER	1	GRAINGER	1ECK4	GC	GC	PAPER TOWEL DISPENSER (SURFACE MOUNTED): 48" A.F.F. MAX TO PAPER TOWEL OUTLET AND CONTROLS
703B	PAPER TOWEL DISPENSER	2	GRAINGER	4TE15	GC	GC	PAPER TOWEL DISPENSER (SURFACE MOUNTED): 48" A.F.F. MAX TO PAPER TOWEL OUTLET AND CONTROLS
704A	SOAP DISPENSER	1	GRAINGER	3WU72	GC	GC	SOAP DISPENSER (WALL MOUNTED): 48" A.F.F. MAX A.F.F. TO OPERABLE CONTROL AND DISPENSER OPENING CENTERLINE
704B	SOAP DISPENSER	2	GRAINGER	3U515	GC	GC	SOAP DISPENSER (WALL MOUNTED): 48" A.F.F. MAX A.F.F. TO OPERABLE CONTROL AND DISPENSER OPENING CENTERLINE
705	MIRROR	1	BOBRICK	B-165X1836	GC	GC	MOUNTING HEIGHT = 80" A.F.F.
706	18" VERTICAL GRAB BAR	1	BOBRICK	B6806X18	GC	GC	
707	BABY CHANGING STATION	1	KOALA KARE	KB200-00 CREAM			
708	REFRIGERATOR	1	FRIGIDAIRE	FRSS2323AB	GC	GC	BLACK SIDE BY SIDE WITH ICE MAKER
~~709~~	~~TOOL BOX~~	~~1~~			~~OWNER~~	~~OWNER~~	
800	FIRE EXTINGUISHER	5	AMEREX	B456	GC	GC	GC TO CONFIRM THE TYPE, MODEL, QUANTITY, AND LOCATION WITH LOCAL FIRE MARSHAL PRIOR TO PROCUREMENT AND INSTALATION.
801	FLOOR SAFE	1	FIREKING SECURITY GROUP	MB2014K-SG4440	GC	GC	SAFE TO BE PROVIDED W/ 5 KEYS. SEE PREFERED VENDORS LIST FOR VENDOR CONTACT.
~~890~~	~~CORK BOARD - 36" X 48"~~	~~1~~			~~GC~~	~~GC~~	
~~891~~	~~CORK BOARD - 72" X 53"~~	~~1~~			~~GC~~	~~GC~~	
~~902~~	~~SNAP FRAME DISPLAY - 44" x 28"~~	~~4~~		~~VIOC - 2744~~	~~OWNER~~	~~GC~~	
~~902A~~	~~SNAP FRAME DISPLAY - 42 3/4" x 30 3/4"~~	~~1~~		~~VIOC - 2859~~	~~OWNER~~	~~GC~~	
~~903~~	~~1 TABLE AND 4 CHAIRS~~	~~1~~			~~OWNER~~	~~GC~~	
~~905~~	~~22"x30" ACCESS HATCH~~	~~2~~	~~BEST ACCESS DOORS~~	~~SKU: BA-AHD-22-30~~	~~GC~~	~~GC~~	
906	ANTIFREEZE FUNNEL	1			GC	GC	SEE DETAIL 8/A-7.1
907	GLOVE DRYING HOOKS	1			DEVON	DEVON	
908	BELT RACK	1			GC	GC	GC TO PROVIDE BLOCKING IN WALL AS REQUIRED.
909	HI / LOW DRINKING FOUNTAIN, ADA COMPLIANT	1			GC	GC	GC TO PROVIDE BLOCKING IN WALL AS REQUIRED.

PREFERRED VENDORS

1. DAYTON
2. DEVON INDUSTRIES
3. COTTERMAN
4. BRW UNLIMITED SERVICES, INC.
5. RTI
6. FLUID EVACUATORS
7. NORCO
8. VISIBLE SOLUTIONS
9. SAYLOR-BEALL
10. AIRCEL
11. ALEMITE
12. HALTEC CORPERATION
13. MILTON
14. GRAINGER
15. BOBRICK
16. KOALA KARE
17. AMANA
18. FRIGIDAIRE
19. AMEREX
20. FIREKING SECURITY GROUP
    CONTACT: SUSAN JENKINS
    105 SECURITY PARKWAY
    NEW ALBANY, INDIANA 47150
    PHONE #: 1.800.452.4655 x3158
    EMAIL: susan.jenkins@cennox.com
21. BEST ACCESS DOORS
22. RUBERMAID
23. GCP APPLIED TECHNOLOGIES
    CONTACT: KELLY PANARIELLO
    PHONE #: 201.360.9052
    EMAIL: kelly.panariello@gcpat.com
24. KINZEL FABRICATION LLC
    CONTACT: KEN KINZEL
    P.O. BOX 341
    OKAWVILLE, IL 62271
    PHONE #: 314.565.0355
    EMAIL: kfab@kinzelfabrication.com
25. OVERHEAD DOOR
    CONTACT: ANGELA BURGESS
    2501 S. STATE HWY 121, SUITE 200
    LEWISVILLE, TX 75067
    PHONE #: 469.549.7121
    EMAIL: angela_burgess@overheaddoor.com

BRAMIC DESIGN GROUP PLLC
8003 S. GALILEO LN.
TUCSON, AZ 85747
PHONE: (520) 401-9183

COPYRIGHT NOTICE
This drawing is the property of the above referenced Professional and is not to be used for any purpose other than the specific project and site names herein, and cannot be reproduced in any manner without the express written permission from the Professional.

DATE	ISSUE
05.17.24	ISSUED FOR PERMIT REVIEW SET

DATE	REVISION
1 07.08.24	C.O.T. COMMENTS

PROFESSIONAL SEAL
REGISTERED ARCHITECT CERTIFICATE NO. 15939 GENE GOLDSTEIN Date Signed 05.17.24 ARIZONA U.S.A. Expires 12.31.25

PROFESSIONAL LICENSE NO:
ARIZONA 15939
CERTIFICATE OF AUTHORIZATION NO:

PROFESSIONAL IN CHARGE
GENE GOLDSTEIN

PROJECT MANAGER
KYLE VILAUBI

QUALITY CONTROL
KYLE VILAUBI, GENE GOLDSTEIN

DRAWN BY
KYLE VILAUBI / JON WADE

PROJECT ADDRESS
2920 S. PARK AVE
TUCSON ARIZONA 85713

Valvoline Instant Oil Change

VALVOLINE INSTANT OIL CHANGE

BDG PROJECT NUMBER
23-849

SHEET NAME
OPERATIONS EQUIPMENT PLAN AND SCHEDULE

SHEET #
G-3.1

STONE- HARDIE PANEL OPTION

BIM 360://VIOC Proto/3BLH-AZ Arch.rvt 13-07-2023 17:28:34

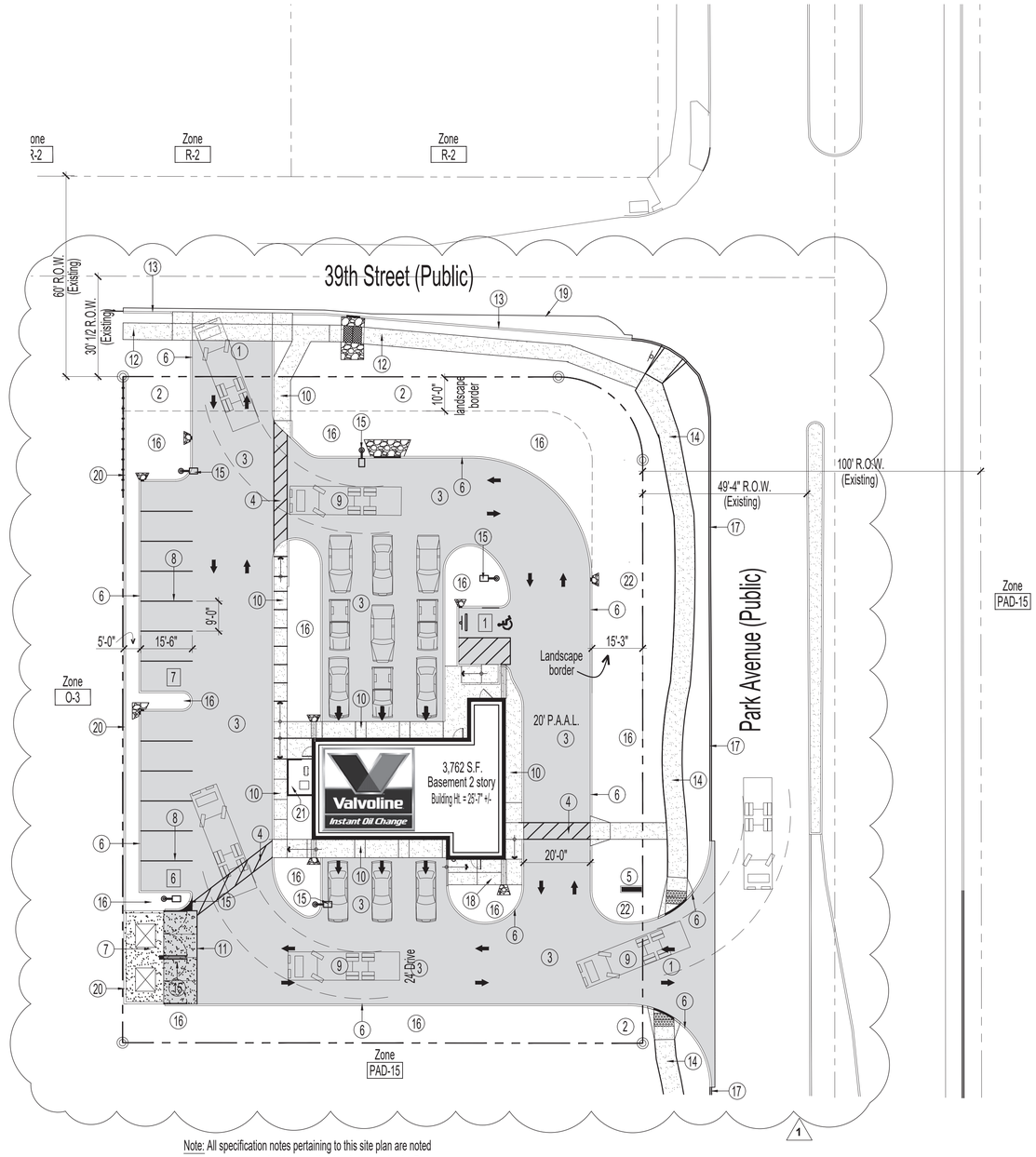

Note: All specification notes pertaining to this site plan are noted for reference only. Notes on the development plan by Rick Engineering governs for all bids, take offs, and construction.

Site Plan

Scale: 1" = 20'-0"

(This site plan is preliminary in nature and subject to further review by the City of Tucson)

N

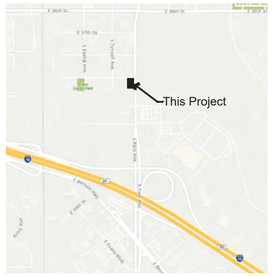

N

LOCATION MAP

LOCATION MAP
SECTION 30, T14S, R14E, G&SRM
CITY OF TUCSON
PIMA COUNTY, ARIZONA

Site Data:

1. Site zoning:	I-1
2. Site area:	31,108 SF or 0.71 acres +/-
3. Building tabulations:	1. Building (Basement) = 1,759 SF 2. Building (Grade floor) = 2,003 SF Total = 3,762 SF
4. Parking required:	Commercial Services Use Group 1:300 GFA 3,762 SF / 300 = 12.54 spaces
5. Parking provided:	13 spaces
6.Loading zone:	Not required

Site Plan keynotes:

1. New 24'-0" wide driveway entry curb cut.
2. New 10'-0" landscape buffer yard.
3. New asphalt paving, typical throughout.
4. New striped pedestrian access isle.
5. New ground mounted monument sign (by separate permit).
6. New 6" vertical concrete curb, typical.
7. New double trash enclosure.
8. New painted white parking space striping, typical.
9. Trash truck maneuverability diagram.
10. New concrete sidewalk.
11. New painted steel gates.
12. New sidewalk in R.O.W..
13. New curb. in R.O.W..
14. Existing sidewalk in R.O.W..
15. New pole mounted site lighting.
16. New landscape area.
17. Existing curb in R.O.W..
18. New bicycle parking area, short term and long term.
19. Existing edge of pavement to be abandoned.
20. New 6'-0" tall screen wall, refer to development plan for additional information.
21. New 7'-0" x 10'-0" utility yard, with 3" x 3" x 4'-0 screen fencing, painted. Refer to detail 3, sheet A2.1 for additional information.
22. New 8'-6" landscape buffer yard.

BRAMIC DESIGN GROUP PLLC
8003 S. GALILEO LN.
TUCSON, AZ 85747
PHONE: (520) 401-9183

COPYRIGHT NOTICE
This drawing is the property of the above referenced Professional and is not to be used for any purpose other than the specific project and site names herein, and cannot be reproduced in any manner without the express written permission from the Professional.

DATE	ISSUE
05.17.24	ISSUED FOR PERMIT REVIEW SET

DATE	REVISION
07.08.24	C.O.T. COMMENTS

PROFESSIONAL SEAL

REGISTERED ARCHITECT CERTIFICATE NO. 15939 GENE GOLDSTEIN Date 05.17.24 ARIZONA U.S.A. Expires 12.31.25

PROFESSIONAL LICENSE NO:
ARIZONA 15939
CERTIFICATE OF AUTHORIZATION NO:

PROFESSIONAL IN CHARGE
GENE GOLDSTEIN

PROJECT MANAGER
KYLE VILAUBI

QUALITY CONTROL
KYLE VILAUBI, GENE GOLDSTEIN

DRAWN BY
KYLE VILAUBI / JON WADE

PROJECT ADDRESS
2920 S. PARK AVE
TUCSON ARIZONA 85713

Valvoline Instant Oil Change

VALVOLINE INSTANT OIL CHANGE

BDG PROJECT NUMBER
23-849

SHEET NAME

ARCHITECTURAL REFERENCE SITE PLAN

SHEET #

C1.0

STONE- HARDIE PANEL OPTION

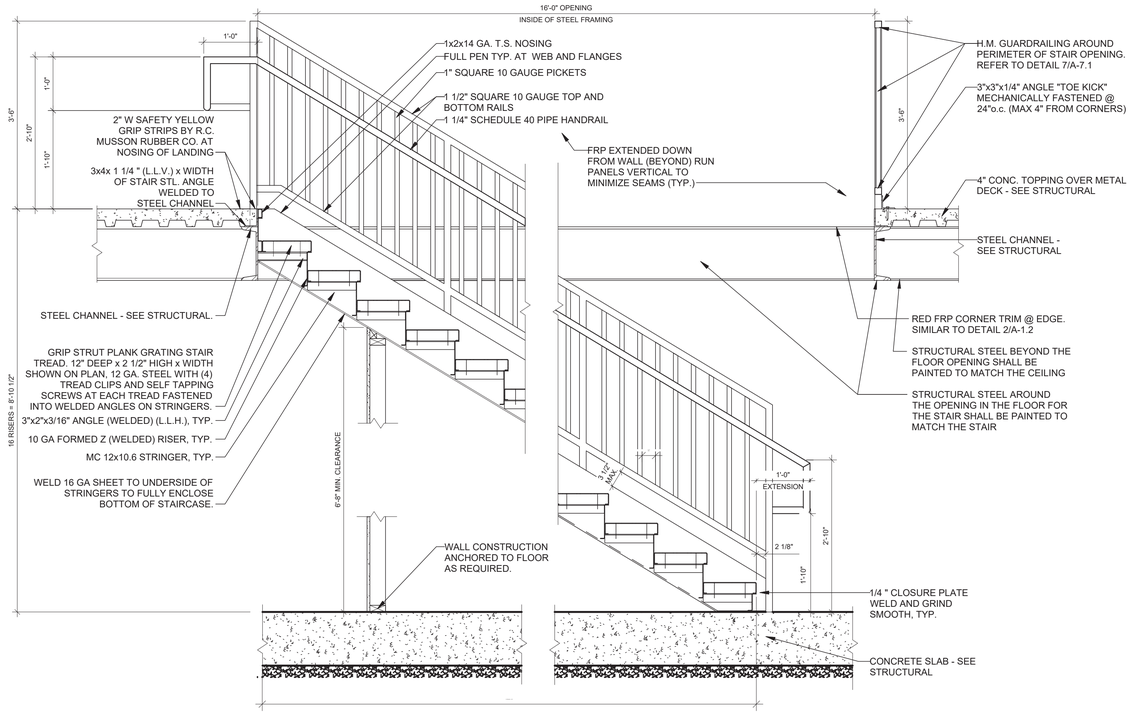

4 A-1.1 STAIR DETAIL
Scale: 3/4" = 1'-0"

FLOOR PLAN KEY NOTES:

1. 5" PVC CHASE UP THRU SLAB w/ LIP OF PIPE EXTENDING 1" BELOW FINISH FACE OF CEILING. COORDINATE LOCATION w/ STRUCTURAL, PLUMBING, AND CEILING PLANS.
2. LINE OF CHASE ABOVE
3. ROUTE PROCESS PIPING FROM DRUM TRANSFER STATION @ UPPER LEVEL, DOWN IN CHASE TO LUBE BAR DRUM TRANSFER IN LUBE PIT. COORDINATE ROUNTING IN FIELD
4. MECHANICAL DUCT ABOVE. SEE MECHANICAL PLANS.
5. MASTERKURE HIGH GLOSS COATING OVER CONCRETE SLAB. PROVIDE UNDERSLAB WATERPROOFING BENEATH ENTIRE LOWER LEVEL - SEE WATERPROOFING DETAILS ON THIS SHEET.
6. ABOVE SLAB SUMP PUMP - SEE PLUMBING
7. LUBE PIT/SUMP CROCK BASIN - SEE PLUMBING
8. BUMP HAT STORAGE
9. WALL ENCLOSURE UNDER STAIRS. INSTALL 5/8" PLYWOOD OVER 2X4 STUDS. FINISHED FACE OF PLYWOOD TO BE ALIGNED WITH OUTSIDE FACE OF STAIR STRINGER. INSTALL W-2 ON SURFACE, ALL SIDES
10. TIRE ROTATION AIR LINE LOCATION. G.C. TO COORDINATE W/ VENDOR
11. COUNTERTOP MOUNTED AT 30" - BASIC LAMINATE INSTALLED WITH CLEATS. ABOVE, PROVIDE 16" DEEP 3/4" PLYWOOD SHELVES MOUNTED AT 65" AND 78" A.F.F.
12. OIL/ WATER SEPARATOR AND STAND - SEE PLUMBING
13. AIR COMPRESSOR, REFER TO ELECTRICAL, AND PLUBMING
14. AUTO AIR DRYER. REFER TO OPPERATIONS EQUIPMENT PLAN G-3.1. (COORDINATE LOCATION IN MECHANICAL ROOM WITH VIOC C.M.)
15. VALVOLINE EQUIPMENT, TYPICAL, REFER TO G-1.3
16. SMOKE DETECTOR. (COORDINATE LOCATION IN MECHANICAL ROOM WITH VIOC C.M.)

GENERAL NOTES

A. INTERIOR WALLS SURROUNDING RESTROOMS AND OFFICE SHALL BE PROVIDED w/ SOUND BATT INSULATION TO EXTEND FULL HEIGHT TO TRUSS, OR JOIST SPACE TO ACHIEVE VIOC ACCEPTABLE SOUND ENCLOSURE. VAPOR BARRIER IS NOT REQUIRED IN THESE WALLS. EXTERIOR WALLS PER R-VALUES REQUIRED, REFER TO SHEET A-4.0 & A-4.1.

B. ALL EXTERIOR WALLS & AREAS ABOVE CEILINGS (JOIST & TRUSS SPACES) SHALL BE PROVIDED WITH BATT INSULATION TO ACHIEVE A COMPLETELY INSULATED THERMAL ENVELOPE AS REQUIRED. BLOWN-IN INSULATION IS UNACCEPTABLE.

C. ALL GYPSUM BOARD IN SERVICE BAYS AND STORAGE AREA SHALL BE 5/8" HIGH ABUSE FIRE SHIELD BY NATIONAL GYPSUM.

D. ALL WALLS EXTENDING TO UNDERSIDE OF TRUSSES SHALL BE BRACED TO STRUCTURE AS REQUIRED. PROVIDE NECESSARY BLOCKING FOR STABLE, SECURE INSTALLATION.

E. REFER TO SHEET G-3.1 FOR EQUIPMENT SCHEDULES AND LOCATIONS.

F. DIMENSIONS FOR INTERIOR WALLS ON PLANS ARE TO FACE OF STUD (U.N.O.) EXTERIOR DIMENSIONS ARE TO FACE OF STUD

G. REFER TO STRUCTURAL FOR FLOOR PENETRATION LOCATIONS

H. POLYETHYLENE VAPOR BARRIER TO BE USED ON WALL/ CEILING APPLICATIONS WHERE UNFACED BATT INSULATION IS USED.

KEY TO WALL TYPES

EXTERIOR WALL: POURED CONCRETE WALLS WITH SMOOTH INTERIOR FINISH

EXTERIOR WALL WITH STUD FURRING: 1X FURRING OR 2X4 LAYED FLAT FURRING AT 16" O.C. w/ P.T. SILL PLATE AND DOUBLE TOP PLATES w/ 5/8" TYPE 'X' GYPSUM BOARD ONE SIDE.

INTERIOR WALL: 2x4 STUDS @ 16" O.C. (U.N.O.) OR 2x6 WHERE NOTED ON PLANS, w/ P.T. SILL PLATE AND DOUBLE TOP PLATES w/ 5/8" TYPE 'X' GYPSUM BOARD EACH SIDE. EXTEND WALL AND SECURE TO STRUCTURE. INSULATE STUD CAVITY WITH SOUND BATTS WHERE NOTED.

NOTE: REFER TO STRUCTURAL DRAWINGS FOR ADDITIONAL INFORMATION.

3 A-1.1 BENCH DETAIL
Scale: 1" = 1'-0"

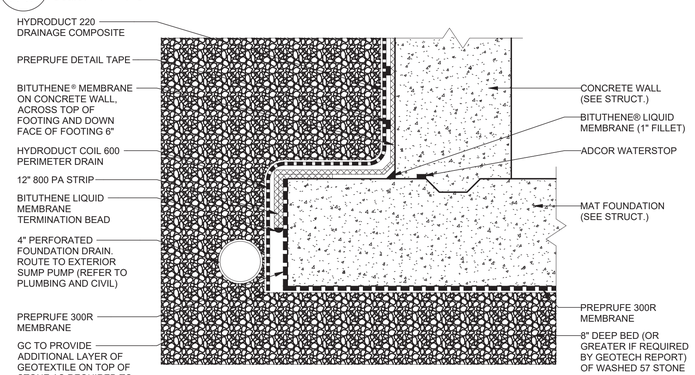

THE INTENT OF THIS WATERPROOFING DETAIL IS TO DEPICT THE MANUFACTURER'S STANDARD WATERPROOFING DETAILS. REFER TO STRUCTURAL DRAWINGS FOR MAT FOUNDATION DESIGN AND DIMENSIONS.

NOTE: THIS WATERPROOFING DETAIL SHALL BE APPLIED AROUND THE ENTIRE PERIMETER OF THE LOWER LEVEL TO CREATE A SEALED WATERPROOFING SYSTEM AND PREVENT GROUND WATER INFILTRATION INTO THE BUILDING.

NOTE: THIS DETAIL IS WITHIN GCP'S WARRANTY SPECIFICATIONS AND IN NO WAY RELIEVES THE CONTRACTOR FROM FOLLOWING ALL MANUFACTURER SPECIFICATIONS.

2 A-1.1 WATERPROOFING DETAIL
Scale: 1 1/2" = 1'-0"

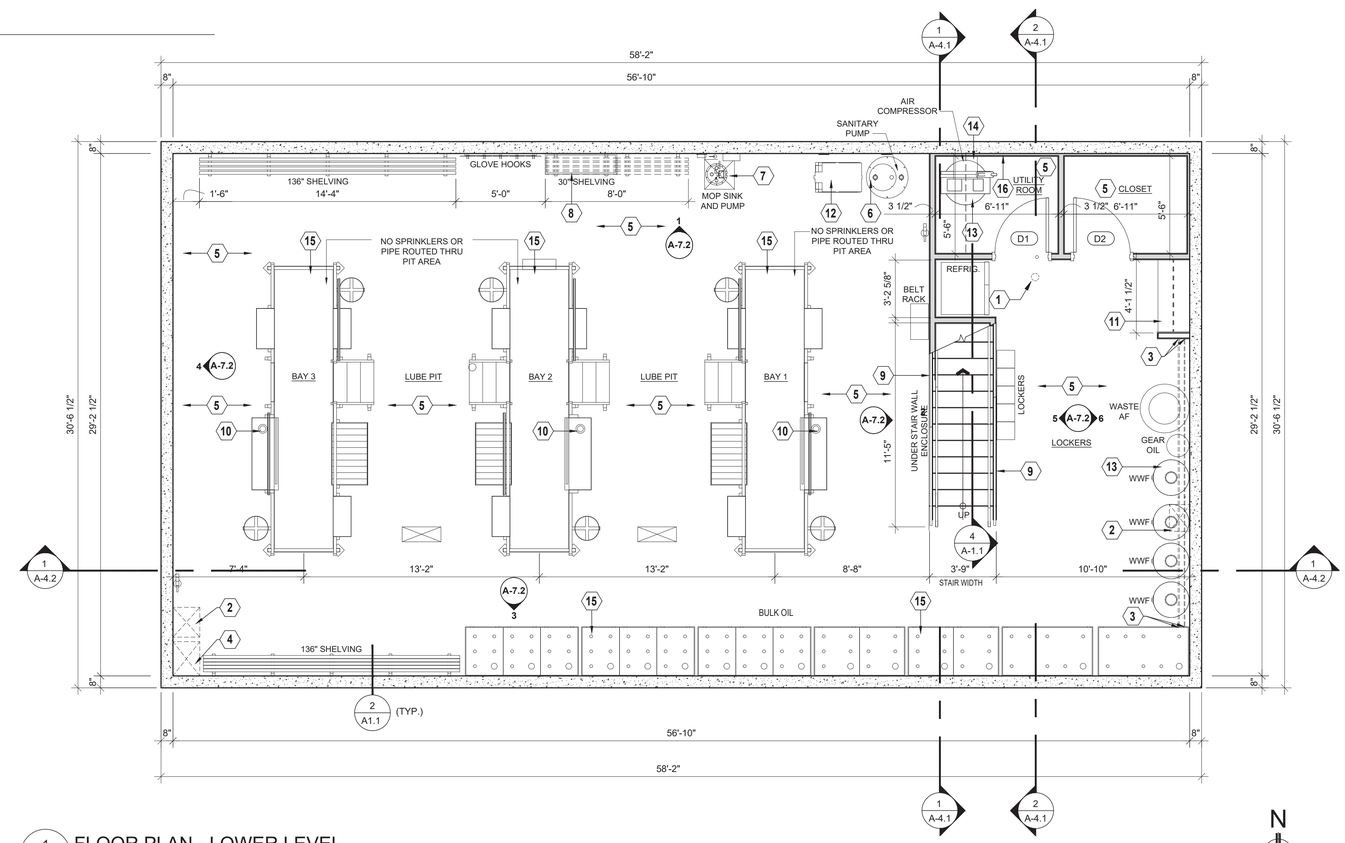

1 A-1.1 FLOOR PLAN - LOWER LEVEL
Scale: 1/4" = 1'-0"

BRAMIC DESIGN GROUP PLLC
8003 S. GALILEO LN.
TUCSON, AZ 85747
PHONE: (520) 401-9183

COPYRIGHT NOTICE
This drawing is the property of the above referenced Professional and is not to be used for any purpose other than the specific project and site names herein, and cannot be reproduced in any manner without the express written permission from the Professional.

DATE	ISSUE
05.17.24	OWNER REVIEW SET

DATE	REVISION
07.08.24	C.O.T. COMMENTS

PROFESSIONAL SEAL

REGISTERED ARCHITECT CERTIFICATE NO. 15939 GENE GOLDSTEIN ARIZONA U.S.A. Expires 12.31.25

PROFESSIONAL LICENSE NO:
ARIZONA 15939
CERTIFICATE OF AUTHORIZATION NO:

PROFESSIONAL IN CHARGE
GENE GOLDSTEIN A.I.A.

PROJECT MANAGER
KYLE VILAUBI

QUALITY CONTROL
KYLE VILAUBI, GENE GOLDSTEIN

DRAWN BY
KYLE VILAUBI

PROJECT ADDRESS
2920 S. PARK AVE
TUCSON ARIZONA 85713

VALVOLINE INSTANT OIL CHANGE

BDG PROJECT NUMBER
23-849

SHEET NAME
FLOOR PLAN - LOWER LEVEL

SHEET #
A-1.1

FINISH SCHEDULE

ROOM	FLOOR	BASE	WALLS FULL HEIGHT	WALLS WAINSCOT BOTTOM	WALLS WAINSCOT TOP	CEILING/ EXPOSED STRUCTURE	REMARKS
UPPER LEVEL							
WAITING	F-2	B-1	PR-3/PT-1	W-1	PR-3/PT-1	PR-3/PT-3	SEE INTERIOR ELEVATIONS FOR WAINSCOT
SERVICE BAYS	F-1	B-2	PR-3/PT-5	W-2	PR-3/PT-5	PR-3/PT-3	SEE INTERIOR ELEVATIONS FOR WAINSCOT
CLOSET	F-1	B-2	PR-3/PT-5	N/A	N/A	PR-3/PT-3	N/A
OFFICE	F-2	B-1	PR-3/PT-5	W-1	PR-3/PT-5	PR-3/PT-3	SEE INTERIOR ELEVATIONS FOR WAINSCOT
UTILITY ROOM	F-3	B-1	PR-3/PT-5	W-1	PR-3/PT-5	PR-3/PT-3	SEE INTERIOR ELEVATIONS FOR WAINSCOT
UNISEX RESTROOM	F-2	B-1	PR-3/PT-1	W-1	PR-3/PT-1	PR-3/PT-3	SEE INTERIOR ELEVATIONS FOR WAINSCOT
STORAGE	F-1	B-2	PR-3/PT-5	N/A	N/A	PR-3/PT-3	N/A
LOWER LEVEL							
LUBE PIT	F-3	B-1	PR-1/PT-5	W-2	N/A	PR-2/PT-5	W-2 AT STAIR ONLY, PT-6 AS SHOWN ON INT. ELEVS.
LOCKERS	F-3	B-1	PR-1/PT-5	W-2	N/A	PR-2/PT-5	N/A
CLOSET	F-3	B-1	PR-1/PT-5	N/A	N/A	PR-2/PT-5	N/A
UTILITY ROOM	F-3	B-1	PR-1/PT-5	N/A	N/A	PR-2/PT-5	N/A

NOTES:
1. ANY MOISTURE PROBLEMS SUCH AS ROOF LEAKS, IMPROPER GRADING, ETC. MUST BE CORRECTED PRIOR TO PAINT APPLICATION.
2. CLEAN & PREPARE ALL SURFACES ACCORDING TO COATING MFG. RECOMMENDATIONS.
3. ALL GALVANIZED SURFACES SHALL BE CORROSION PROTECTED PER SPEC. RUSTED AREAS SHOULD BE PREPARED PER SSPC-SP2 OR SP3 HAND OR POWER TOOL CLEANING & PRIMED WITH PR-2 PRIOR TO APPLICATION OF SPECIFIED FINISH COATS.
4. ALL SURFACES SHALL RECEIVE (2) APPLICATIONS OF TOP COAT, APPLIED ACCORDING TO MFG. RECOMMENDATIONS.
5. ENTIRE DOOR & FRAME SHALL BE PAINTED ONE COLOR AS NOTED.
6. ALL WELDS SHALL BE GROUND SMOOTH PRIOR TO PRIME COAT.

NOTES (CONTINUED):
7. ALL EXPOSED STEEL AT STAIR, STAIR RAIL AND PIT OPENING SHALL BE PAINTED PT-4.
8. LIGHT BROOM FINISH ON LUBE PIT FLOOR WITH (3) COATS OF MASTERKURE CC HIGH GLOSS. TWO COATS AT INITIAL FINISH AND ONE COAT AFTER CLEANING, JUST PRIOR TO TURNOVER.

FINISH LEGEND

MARK	COLOR	FINISH	MANUFACTURER	PRODUCT
PRIMERS:				
PR-1	TINTED TO MATCH		SHERWIN WILLIAMS	HEAVY DUTY BLOCK FILLER B42W150
PR-2	TINTED TO MATCH		SHERWIN WILLIAMS	PRO-CRYL PRIMER B66 -1300 SERIES
PR-3	TINTED TO MATCH		SHERWIN WILLIAMS	PREP-RITE 200 PRIMER B28W200
PAINTS:				
PT-1	SW7012 (CREAMY)	GLOSS	SHERWIN WILLIAMS	WATER BASED ALKYD URETHANE ENAMEL B53
PT-2	SW7515 (HOMESTEAD BROWN)	GLOSS	SHERWIN WILLIAMS	SHER-CRYL HPA
PT-3	CEILING WHITE	GLOSS	SHERWIN WILLIAMS	WATER BASED ALKYD URETHANE ENAMEL B53
PT-4	VALVOLINE RED	GLOSS	SHERWIN WILLIAMS	WATER BASED ALKYD URETHANE ENAMEL B53 - Color to match Pantone 485 RED
PT-5	ULTRA WHITE	GLOSS	SHERWIN WILLIAMS	WATER BASED ALKYD URETHANE ENAMEL B53
PT-6	SW2936 (BLACK EMERALD)	GLOSS	SHERWIN WILLIAMS	WATER BASED ALKYD URETHANE ENAMEL B53
WALL PANELS:				
W-1	S-490N - LIGHT GRAY	SMOOTH	MARLITE	FRP PANEL W/ MATCHING COLOR TRIMS - CLASS C. PROVIDE ALTERNATIVE PRICE FOR GLASSLINER FRP WITH PEBBLE FINISH 1
W-2	MAUNA LOA (1295)	SATIN SANDSTONE	CRANE COMPOSITES	FRP PANEL W/ MATCHING COLOR TRIMS – CLASS C
PLASTIC LAMINATE:				
PL-1	DOVE GREY	MATTE	WILSONART	STANDARD HPL FINISH D92-60
FLOOR FINISH:				
F-1	SEE FINISH NOTE F		SILIKAL / SHERWIN WILLIAMS	SEAMLESS, RESINOUS SYSTEM - SEE FINISH NOTE F
F-2	569 EBONY		TARKETT	12"x12"x1/8" VCT (Wax Floor)
F-3	CLEAR	HIGH GLOSS	BASF	MASTERKURE CC 300 SB , 3 COATS, MIN. - SEE FINISH NOTE E
BASE:				
B-1	BLACK	SMOOTH	ROPPE OR EQUAL	700 SERIES 4" RUBBER COVE BASE
B-2	SEE FINISH NOTE F		SILIKAL	SEAMLESS, RESINOUS SYSTEM
SOLID SURFACE:				
SS-1	BAJA MELANGE	#9030 ML	WILSONART	GIBRALTER (OFFICE WINDOW - SEE 3A-A6.1) 1

FINISH NOTES

A. W-1 FINISH SHALL BE MARLITE .090 PANELS. CONTACT (330) 343-6621. USE B-1 BASE w/ THIS WALL FINISH. REFER TO DETAIL 4/A-7.1

B. W-2 FINISH IS AVAILABLE THROUGH CRANE COMPOSITES. CONTACT: KEVIN BELLINGER @ (704) 904-4730. REFER TO DETAIL 5/A-7.1.

C. PROVIDE STANDARD FRP TRIMS & MOLDINGS IN COLORS TO MATCH FRP FOR FINISHES W-1 & W-2. COMPLY w/ MANUFACTURERS INSTALLATION GUIDELINES USING ONLY APPROVED ADHESIVES AND SEALANTS.

D. INSIDE OF ALL VERTICAL CHASES TO BE PAINTED PT-5.

E. PROVIDE LIGHT BROOM FINISH @ CONCRETE SURFACES SCHEDULED TO RECEIVE F-3.

F. F-1 SHALL BE A SEAMLESS, RESINOUS QUARTZ FLOORING SYSTEM AS MANUFACTURED BY SILIKAL OR DUR-A-FLEX. QUARTZ FLOORING SYSTEM SHALL CONSIST OF 61 CQ SELF-LEVELING BLACK SURFACE COAT, FOLLOWED BY BROADCAST COAT (70% BLACK, 10% BLUE, 10% GREY, 10% WHITE), FOLLOWED BY TWO TOPCOATS OF R71 SEALER. INTEGRAL BASE IS INCLUDED AS PART OF THIS FLOORING SYSTEM. PROVIDE YELLOW CAUTION STRIPING AND BLUE END-OF-BAY MARKING INTEGRAL w/ FLOOR FINISH - SEE FLOOR PLAN. PAINT TO BE SHERWIN WILLIAMS, PROPARK WATERBORNE TRAFFIC PAINT - BLUE. FOR PRICING, DISTRIBUTION, AND INSTALLATION, CONTACT THE FOLLOWING:
*JOHN COTHRAN (SILIKAL) (864) 328-4572

*MATTHEW SIMPKINS (DUR-A-FLEX) (317) 690-4696 AN ACCEPTABLE ALTERNATIVE IS STONHARD 1

*GREG SOLTIS (RES-TEK) (404) 805-6494

FLOOR PLAN KEY NOTES:

1. YELLOW SAFETY STRIPE INTERGRAL W/FLOOR FINISH. REFER TO FINISH NOTE "F" & PIT OPENING PLAN DETAIL 1/A-9.1.
2. FRP FINISH THIS WALL (OR AREA). PROVIDE/INSTALL TRIM AS REQUIRED. REFER TO FINISH SCHEDULE, INTERIOR ELEVATIONS, DETAILS 4 & 5/A-7.1
3. PLASTIC LAMINATE COUNTERTOP AND WALL CABINETS. TOP OF FRP @ 52" A.F.F. REFER TO INTERIOR ELEVATIONS & DETAIL 1 & 6/A-7.1
4. MECHANICAL YARD. 4" CONC. SLAB, 3"x3" TUBE STEEL POSTS AND 4" COMPOSITE VERTICAL SLAT SCREENING FENCE. REFER TO DETAIL #3/A2.1 AND #6/A10.1 FOR ADDITIONAL INFORMATION.
5. PIPE BOLLARD (SEE PLANS FOR QUANITY/LOCATION). REFER TO DETAIL 6/A-10.1.
6. SINK REFER TO INTERIOR ELEVATIONS & PLUMBING.
7. (2) WATER FOUNTAINS (HI/LO) REFER TO INTERIOR ELEVATIONS AND PLUMBING.
8. ELECTRICAL PANEL. REFER TO ELECTRICAL.
9. DRUM TRANSFER SHELVING. REFER TO INTERIOR ELEVATIONS AND DETAIL 3/A-7.1.
10. ROUTE LUBE BAR LINES DOWN IN WALL TO TANKS IN LUBE PIT.
11. PROVIDE SEALED/ COLORED CONCRETE APRONS IN FRONT OF OVERHEAD DOORS. REFER TO CIVIL FOR EXTENT OF PAVING AND FINISH MATERIAL.
12. EXTEND FLOOR FINISH (F-1) TO OUTER EDGE OF SLAB @ BAY DOORS.
13. PROVIDE PVC SLEEVE ROUTED THROUGH CONCRETE SIDEWALK AND WALL FOR SERVICE BELL RINGER HOSE. COORDINATE REQUIREMENTS WITH VALVOLINE C.M. PROIOR TO SIDEWALK/ CURB INSTALATION. SEE DETAIL 2/A2.1.
14. PVC PIPE ROUTED THRU FLOOR SLAB TO LOWER LEVEL. LIP OF PIPE TO EXTEND 1" BELOW CEILING. TOP OF PIPE TO EXTEND 10" ABOVE SLAB. PROVIDE PVC CAP. REFER TO STRUCTURAL.
15. PROVIDE 1 1/4" x 1 1/4" x 16 GA. STAINLESS STEEL CORNER GUARDS OVER FRP PANELS. GUARDS TO STOP AT TOP OF FRP. REFER TO DETAIL 2/A-1.2.
16. MECHANICAL DUCT. REFER TO MECHANICAL.
17. EYEWASH LOCATION. REFER TO PLUMBING.
18. LOCATION OF SIGNAGE ABOVE. REFER TO EXTERIOR ELEVATIONS AND SIGN SCHEDULE. (UNDER SEPARATE PERMIT.
19. "OPEN" SIGNAGE. REFER TO EXTERIOR ELEVATIONS, SIGN SCHEDULE, AND ELECTRICAL.
20. EXTERIOR ACCESS DOOR FOR CHASE. REFER TO EXTERIOR ELEVATIONS & DOOR SCHEDULE.
21. ANTIFREEZE FUNNEL BY G.C. MOUNTED ON WALL ABOVE PVC CHASE @ 30" AFF REFER TO DETAIL 8/A-7.1.
22. ROYAL BLUE STRIPE INTEGRAL WITH FLOOR FINISH. REFER TO FINISH NOTE "F" & PIT OPENING PLAN DETAIL 1/A-9.1.
23. SLOPE CONCRETE TOPPING APPROXIMATELY 30" Ø AROUND FLOOR DRAIN (TYP.).
24. AIR PRESSURE SHUT OFF VALVE LOCATION FOR AIR COMPRESSOR.
25. NOT USED
26. BLUE GUIDE SQUARE ON FLOOR - INTEGRAL WITH FLOOR FINISH. REFER TO FINISH NOTE "F" & PIT OPENING PLAN DETAIL 1/A9.1
27. WATER HEATER ON SHELF ABOVE. REFER TO PLUMBING AND DETAIL 2/A-7.1.
28. STOP POINT FOR FRP WALL FINISH.
29. NO FRP WALL FINISH IN THIS LOCATION.
30. AIRLINE PEDESTAL (BY OWNER).
31. ANTI-FREEZE FUNNEL. REFER TO DETAIL 8/A-7.1.
32. GALV. SHEET METAL DOWNSPOUT AND SCUPPER BOX. REFER TO EXTERIOR ELEVATIONS AND ROOF PLAN.
33. 3/4" PLYWOOD ON ENTIRE WALL 6 FEET WIDE FROM CORNER. PAINT PT-1 (BY G.C.).
34. 2" Ø HOLE TO BE CORE DRILLED THRU FLOOR. G.C. TO COORDINATE LOCATIONS WITH VIOC C.M.
35. FURNISH AND INSTALL VESTIL OVERHEAD TRACK PROTECTOR - 24 1/4" HIGH =, MODEL #DSP-24 FROM NORTHERN TOOL + EQUIPMENT. SECURELY MOUNT TO FLOOR (EACH SIDE OF DOOR) TO COVER/ PROTECT VITECTOR ELECTRONIC EYES AND LIFTECH EQUIPMENT WITHOUT BLOCKING SIGHT LINE. TYPICAL.
36. USE 2x6 WOOD STUDS AT PLUMBING WALL.
37. LOCATION OF ELECTRICAL SERVICE ENTRANCE EQUIPMENT. REFER TO ELECTRICAL.
38. SLOPE CONCRETE TOPPING APPROXIMATELY 30" Ø AROUND FLOOR DRAIN. SLOPE OF CONCRETE SHALL NOT EXCEED 1:48
39. CLEAR ANODIZED ALUMINUM STOREFRONT DOOR/WINDOW SYSTEM.
40. MECHANICAL EQUIPMENT.

GENERAL NOTES

A. INTERIOR WALLS SURROUNDING RESTROOMS AND OFFICE SHALL BE PROVIDED w/ SOUND BATT INSULATION TO EXTEND FULL HEIGHT TO TRUSS, OR JOIST SPACE TO ACHIEVE VIOC ACCEPTABLE SOUND ENCLOSURE. VAPOR BARRIER IS NOT REQUIRED IN THESE WALLS. EXTERIOR WALLS PER R-VALUES REQUIRED, REFER TO SHEET A-4.1.

B. ALL EXTERIOR WALLS & AREAS ABOVE CEILINGS (JOIST & TRUSS SPACES) SHALL BE PROVIDED WITH BATT INSULATION TO ACHIEVE A COMPLETELY INSULATED THERMAL ENVELOPE AS REQUIRED. BLOWN-IN INSULATION IS UNACCEPTABLE.

C. ALL GYPSUM BOARD IN SERVICE BAYS AND STORAGE AREA SHALL BE 5/8" HIGH ABUSE FIRE SHIELD BY NATIONAL GYPSUM.

D. ALL WALLS EXTENDING TO UNDERSIDE OF TRUSSES SHALL BE BRACED TO STRUCTURE AS REQUIRED. PROVIDE NECESSARY BLOCKING FOR STABLE, SECURE INSTALLATION.

E. REFER TO SHEET G-3.1 FOR EQUIPMENT SCHEDULES AND LOCATIONS.

F. DIMENSIONS FOR INTERIOR WALLS ON PLANS ARE TO FACE OF STUD (U.N.O.) EXTERIOR DIMENSIONS ARE TO FACE OF STUD

G. REFER TO STRUCTURAL FOR FLOOR PENETRATION LOCATIONS

H. POLYETHYLENE VAPOR BARRIER TO BE USED ON WALL/ CEILING APPLICATIONS WHERE UNFACED BATT INSULATION IS USED.

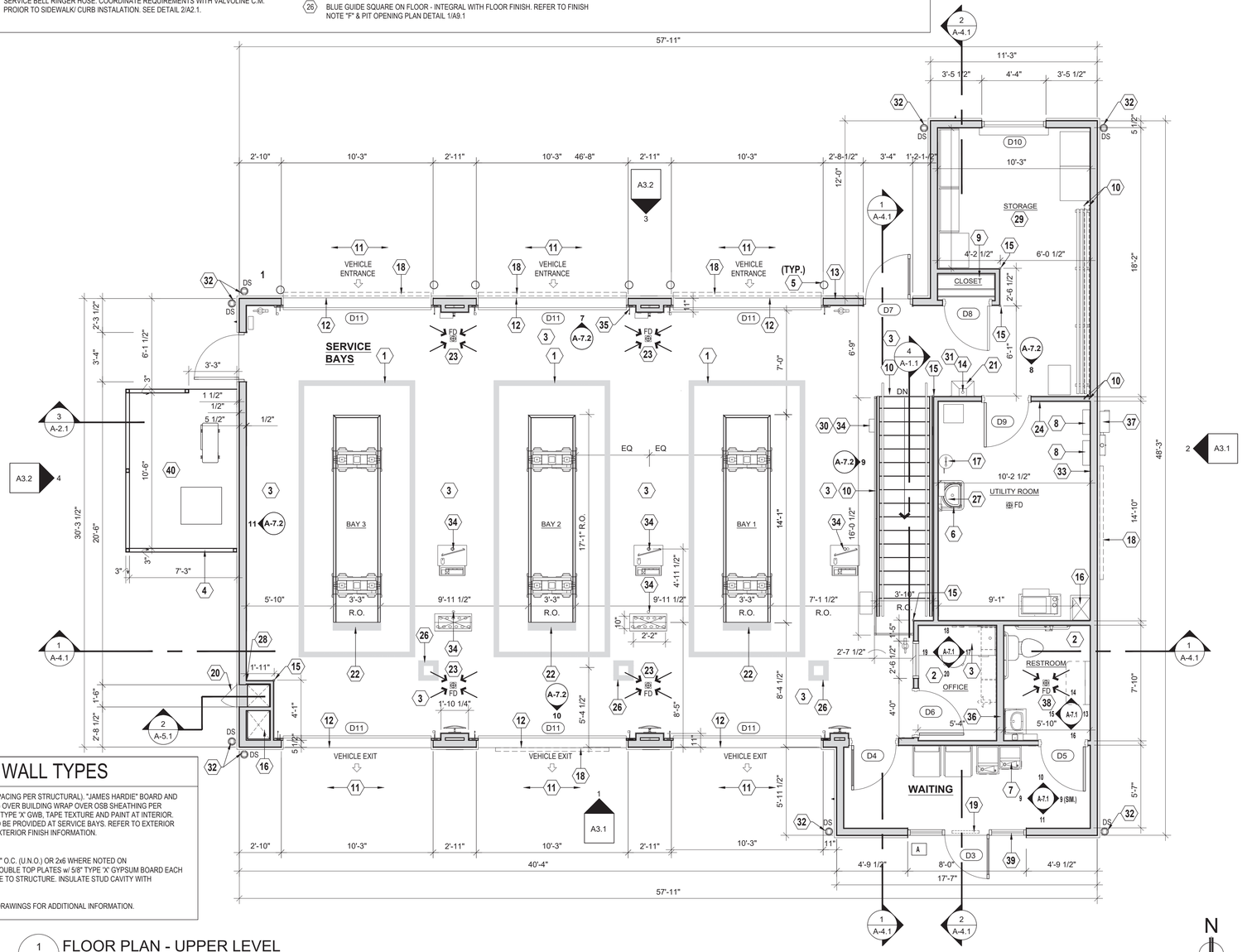

KEY TO WALL TYPES

WOOD FRAMED STUD WALLS (SPACING PER STRUCTURAL). "JAMES HARDIE" BOARD AND BATTEN SIDING (SW6108 COLOR) OVER BUILDING WRAP OVER OSB SHEATHING PER STRUCTURAL AT EXTERIOR, 5/8" TYPE 'X' GWB, TAPE TEXTURE AND PAINT AT INTERIOR. 5/8" HIGH ABUSE FIRE SHIELD TO BE PROVIDED AT SERVICE BAYS. REFER TO EXTERIOR ELEVATIONS FOR ADDITIONAL EXTERIOR FINISH INFORMATION.

INTERIOR WALL: 2x4 STUDS @ 16" O.C. (U.N.O.) OR 2x6 WHERE NOTED ON PLANS, w/ P.T. SILL PLATE AND DOUBLE TOP PLATES w/ 5/8" TYPE 'X' GYPSUM BOARD EACH SIDE. EXTEND WALL AND SECURE TO STRUCTURE. INSULATE STUD CAVITY WITH SOUND BATTS WHERE NOTED.

NOTE: REFER TO STRUCTURAL DRAWINGS FOR ADDITIONAL INFORMATION.

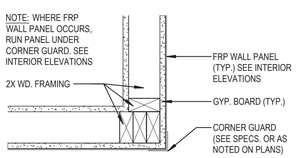

2 / A-1.2 CORNER GUARD DETAIL
Scale: 1 1/2" = 1'-0"

1 / A-1.2 FLOOR PLAN - UPPER LEVEL
Scale: 1/4" = 1'-0"

BRAMIC DESIGN GROUP PLLC
8003 S. GALILEO LN.
TUCSON, AZ 85747
PHONE: (520) 401-9183

COPYRIGHT NOTICE
This drawing is the property of the above referenced Professional and is not to be used for any purpose other than the specific project and site names herein, and cannot be reproduced in any manner without the express written permission from the Professional.

DATE	ISSUE
05.17.24	OWNER REVIEW SET

DATE	REVISION
1 07.08.24	C.O.T. COMMENTS

PROFESSIONAL SEAL
REGISTERED ARCHITECT CERTIFICATE NO. 15939 GENE GOLDSTEIN Date Signed 05.17.24 ARIZONA U.S.A. Expires 12.31.25

PROFESSIONAL LICENSE NO:
ARIZONA 15939
CERTIFICATE OF AUTHORIZATION NO:

PROFESSIONAL IN CHARGE
GENE GOLDSTEIN A.I.A.

PROJECT MANAGER
KYLE VILAUBI

QUALITY CONTROL
KYLE VILAUBI, GENE GOLDSTEIN

DRAWN BY
KYLE VILAUBI

PROJECT ADDRESS
2920 S. PARK AVE
TUCSON ARIZONA 85713

Valvoline Instant Oil Change

VALVOLINE INSTANT OIL CHANGE

BDG PROJECT NUMBER
23-849

SHEET NAME
FLOOR PLAN - UPPER LEVEL

SHEET #
A-1.2

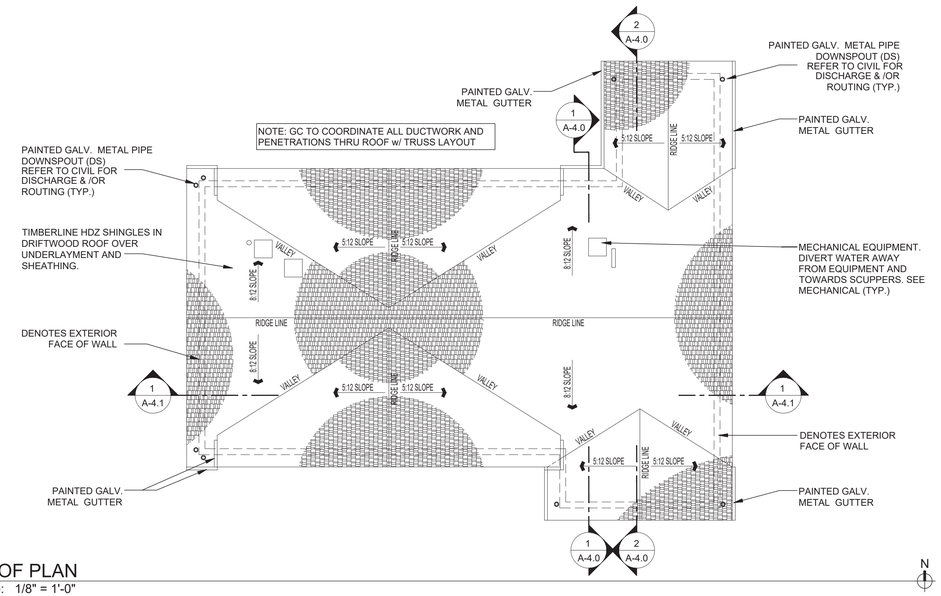

4 A-2.1 ROOF PLAN
Scale: 1/8" = 1'-0"

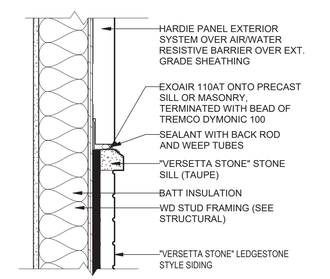

1 A-2.1 FLASHING DETAIL - BRICK/EIFS
Scale: 1 1/2" = 1'-0"

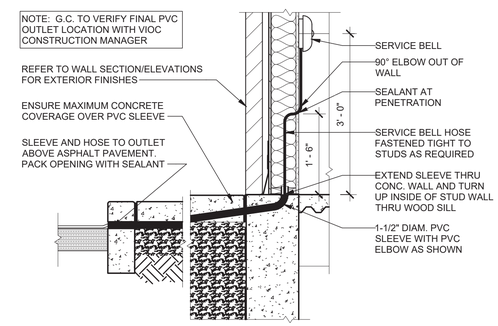

2 A-2.1 SERVICE BELL DETAIL
Scale: 3/4" = 1'-0"

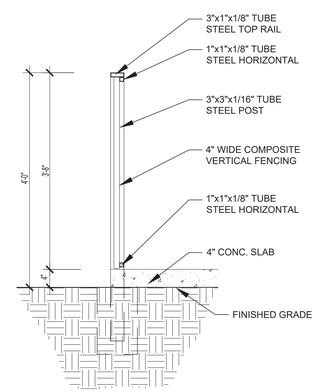

3 A-2.1 MECH. YARD SCREEN FENCE SECTION
Scale: 3/4" = 1'-0"

BRAMIC DESIGN GROUP PLLC
8003 S. GALILEO LN.
TUCSON, AZ 85747
PHONE: (520) 401-9183

COPYRIGHT NOTICE
This drawing is the property of the above referenced Professional and is not to be used for any purpose other than the specific project and site names herein, and cannot be reproduced in any manner without the express written permission from the Professional.

DATE	ISSUE
05.17.24	ISSUED FOR PERMIT REVIEW SET

	DATE	REVISION
1	07.08.24	C.O.T. COMMENTS

PROFESSIONAL SEAL

REGISTERED ARCHITECT CERTIFICATE NO. 15939 GENE GOLDSTEIN Date Signed 05.17.24 ARIZONA U.S.A. Expires 12.31.25

PROFESSIONAL LICENSE NO:
ARIZONA 15939
CERTIFICATE OF AUTHORIZATION NO:

PROFESSIONAL IN CHARGE
GENE GOLDSTEIN

PROJECT MANAGER
KYLE VILAUBI

QUALITY CONTROL
KYLE VILAUBI, GENE GOLDSTEIN

DRAWN BY
KYLE VILAUBI / JON WADE

PROJECT ADDRESS
2920 S. PARK AVE
TUCSON ARIZONA 85713

Valvoline Instant Oil Change

VALVOLINE INSTANT OIL CHANGE

BDG PROJECT NUMBER
23-849

SHEET NAME
ROOF PLAN & DETAILS

SHEET #
A-2.1

STONE- HARDIE PANEL OPTION

13-07-2023 17:25:53 BIM 360://VIOC Proto/3BLH-AZ Arch.rvt

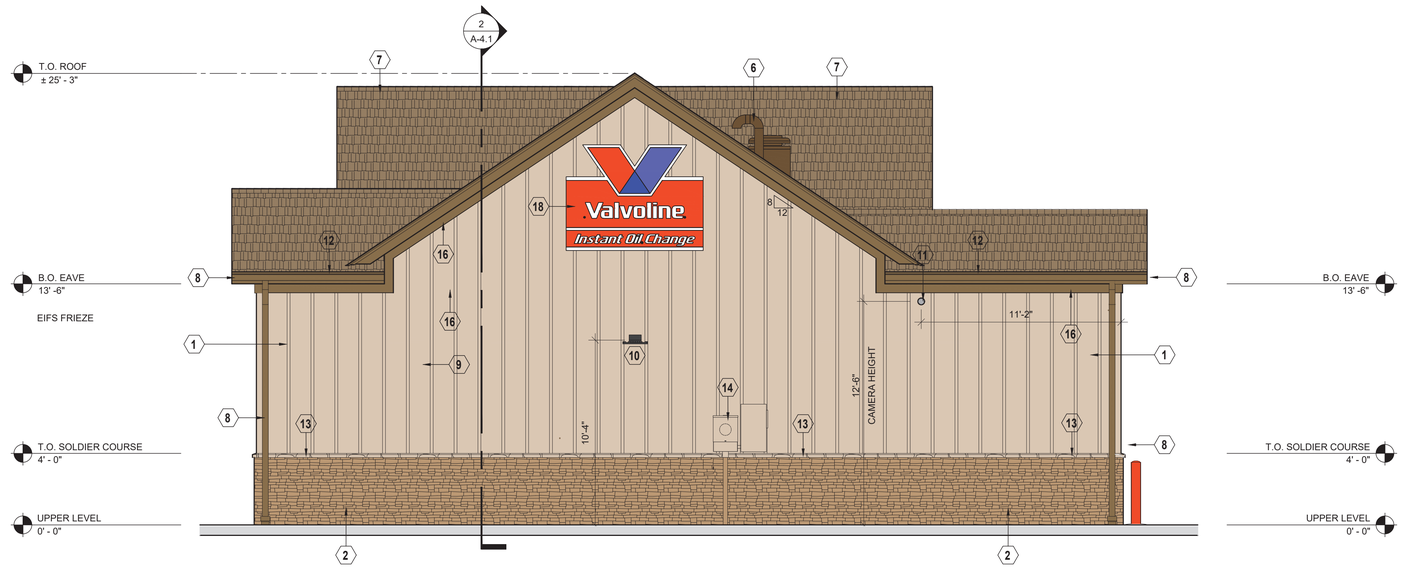

2 A-3.1 EXTERIOR ELEVATION (OVERALL RIGHT)
Scale: 1/4" = 1'-0"

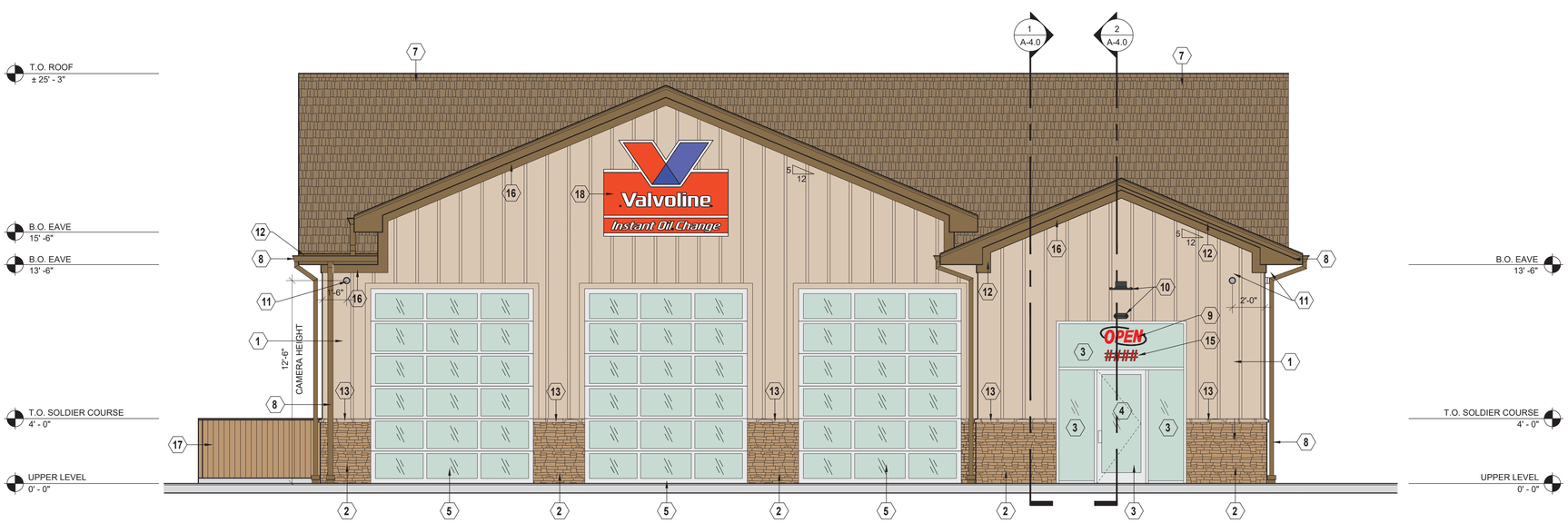

1 A-3.1 EXTERIOR ELEVATION (OVERALL FRONT)
Scale: 1/4" = 1'-0"

ELEVATION NOTES

1. WOOD FRAMED STUD WALLS WITH JAMES HARDIE BOARD AND BATTEN SIDING (SW6108 COLOR) OVER BUILDING WRAP AT EXTERIOR. 5/8" TYPE 'X' GWB, TAPE TEXTURE AND PAINT AT INTERIOR. 5/8" HIGH ABUSE FIRE SHIELD TO BE PROVIDED AT SERVICE BAYS.
2. WOOD FRAMED STUD WALLS WITH BUILDING WRAP AND "VERSETTA STONE" LEDGESTONE STYLE WAINSCOT AND JAMES HARDI BOARD AND BATTEN SIDING AT EXTERIOR, 5/8" TYPE 'X' GWB, TAPE TEXTURE AND PAINT AT INTERIOR. 5/8" HIGH ABUSE FIRE SHIELD TO BE PROVIDED AT SERVICE BAYS.
3. CLEAR ANODIZED ALUMINUM STOREFRONT WINDOW SYSTEM.
4. CLEAR ANODIZED ALUMINUM STOREFRONT ENTRY DOOR, 3070.
5. 10'-0"X 12'-0" ALUMINUM AND GLASS OVERHEAD GARAGE DOOR.
6. EXHAUST VENT CAP, REFEER TO MECHANICAL DRAWINGS FOR ADDITIONAL INFORMATION
7. TIMBERLINE HDZ SHINGLES IN DRIFTWOOD ROOF OVER UNDERLAYMENT AND SHEATHING.
8. PAINTED GALV. METAL GUTTER AND DOWNSPOUTS.
9. OPEN SIGN (602)
10. WALL MOUNTED LIGHT FIXTURE.
11. WALL MOUNTED CAMERA.
12. PROVIDE PAINT GRIP AT FASCIA, SOFFIT, AND TRIM PRIOR TO PAINTING. 1
13. "VERSETTA STONE" STONE SILL (TAUPE)
14. ELECTRICAL SERVICE ENTRANCE.
15. PROVIDE 6" TALL VINYL ADDRESS NUMBER CENTERED IN TRANSOM ABOVE DOOR.
16. SECOND LAYER OF HARDI BOARD SIDING TRIM.
17. MECHANICAL YARD, 4" CONC. SLAB, PAINTED 3"x3"x4'-0" TUBE STEEL POSTS AND 4" COMPOSITE VERTICAL SLAT SCREENING FENCE. REFER TO DETAIL 3 SHEET A-2.1 FOR ADDITIONAL INFORMATION.
18. LOGO SIGN (600), CENTER SIGN ON CANOPY BELOW. FIELD VERFIY ALL CONDITIONS. (UNDER SEPARATE PERMIT)

EXTERIOR FINISHES

JAMES HARDIE BOARD AND BATTEN SIDING	JAMES HARDIE BOARD AND BATTEN SIDING (SW6108 COLOR)
STONE WAINSCOT: (GRADE TO PRECAST SILL)	"VERSETTA STONE" LEDGESTONE STYLE (TAUPE) 1
PRECAST SILL:	"VERSETTA STONE" STONE SILL (TAUPE)
COPING, SOFFIT & TRIM:	PAINT GRIP 1
ROOF SCUPPERS & DOWNSPOUTS:	DIMENSIONAL METALS, INC. - PAINT COLOR TO MATCH EXTERIOR FINISH
STOREFRONT SYSTEM:	2x4-1/2" OLD CASTLE 3000 SERIES OR OWNER APPROVED EQUAL ALUMINUM STOREFRONT SYSTEM W/1" INSULATED GLAZING.
H.M. DOORS & FRAMES:	FIELD PAINT W/ SHERWIN-WILLIAMS B66-1300 PRO-CYRL PRIMER FOLLOWED BY (2) FINISH COATS OF B66-300 SHER-CYRL HPA. COLOR SHALL BE SW-7515 "HOMESTEAD BROWN". VERIFY COLOR WITH OWNER 1
O.H. DOOR FINISH:	CLEAR ANODIZED ALUMINUM

SIGNAGE SCHEDULE

NUMBER	DESCRIPTION	SIZE	ILLUMINATED	QUANTITY
600	LOGO SIGN	7'-8" x 5'-11" (45 SF)	INTERNALLY	3
	PROVIDED BY OWNER, INSTALLED BY SIGN CONTRACTOR			
601	LANE INDICATOR SIGN	10'-0" x 1'-0" (10 SF)	NO	3
	PROVIDED BY OWNER, INSTALLED BY SIGN CONTRACTOR			
602	OPEN SIGN	2'-7 1/2" x 11 1/2" (2.52 SF)	INTERNALLY	1
	PROVIDED BY OWNER, INSTALLED BY SIGN CONTRACTOR			
	PROVIDED BY OWNER, INSTALLED BY SIGN CONTRACTOR			

BRAMIC DESIGN GROUP PLLC
8003 S. GALILEO LN.
TUCSON, AZ 85747
PHONE: (520) 401-9183

COPYRIGHT NOTICE
This drawing is the property of the above referenced Professional and is not to be used for any purpose other than the specific project and site names herein, and cannot be reproduced in any manner without the express written permission from the Professional.

DATE	ISSUE
05.17.24	OWNER REVIEW SET

	DATE	REVISION
1	07.08.24	C.O.T. COMMENTS

PROFESSIONAL SEAL

REGISTERED ARCHITECT
CERTIFICATE NO. 15939
GENE GOLDSTEIN
Date 05.17.24
ARIZONA U.S.A.
Expires 12.31.23

PROFESSIONAL LICENSE NO:
ARIZONA 15939
CERTIFICATE OF AUTHORIZATION NO:

PROFESSIONAL IN CHARGE
GENE GOLDSTEIN A.I.A.

PROJECT MANAGER
KYLE VILAUBI

QUALITY CONTROL
KYLE VILAUBI, GENE GOLDSTEIN

DRAWN BY
KYLE VILAUBI

PROJECT ADDRESS
2920 S. PARK AVE
TUCSON ARIZONA 85713

Valvoline
Instant Oil Change

VALVOLINE INSTANT OIL CHANGE

BDG PROJECT NUMBER
23-849

SHEET NAME
EXTERIOR ELEVATIONS

SHEET #
A-3.1

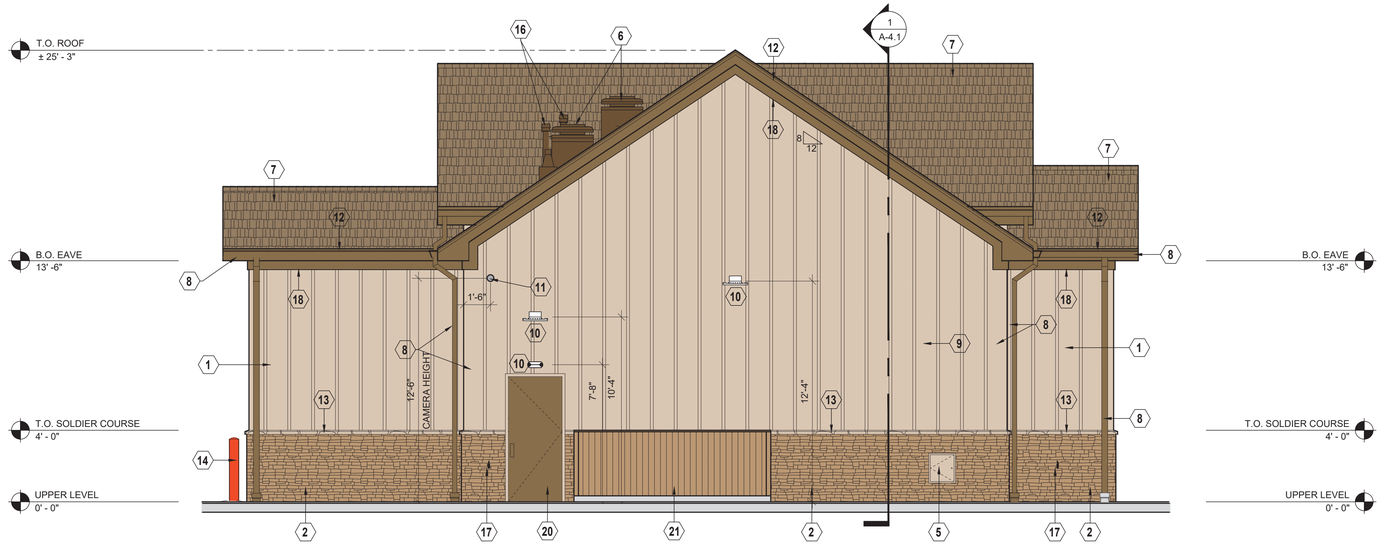

4 A-3.2 EXTERIOR ELEVATION (OVERALL LEFT)
Scale: 1/4" = 1'-0"

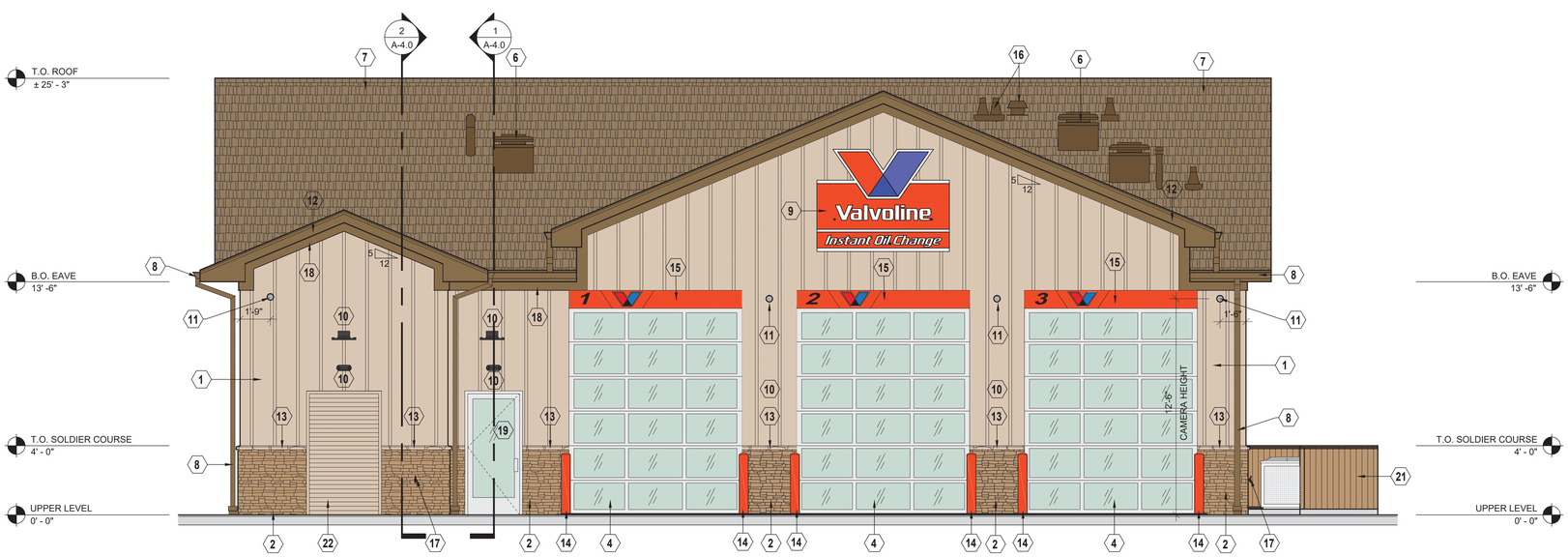

3 A-3.2 EXTERIOR ELEVATION (OVERALL REAR)
Scale: 1/4" = 1'-0"

ELEVATION NOTES

1. WOOD FRAMED STUD WALLS WITH PAINTED HARDI PLANK PANELS AT EXTERIOR, 5/8" TYPE 'X' GWB, TAPE TEXTURE AND PAINT AT INTERIOR. 5/8" HIGH ABUSE FIRE SHIELD TO BE PROVIDED AT SERVICE BAYS.
2. WOOD FRAMED STUD WALLS WITH BUILDING WRAP AND "VERSETTA STONE" LEDGESTONE STYLE WAINSCOT AND JAMES HARDI BOARD AND BATTEN SIDING AT EXTERIOR, 5/8" TYPE 'X' GWB, TAPE TEXTURE AND PAINT AT INTERIOR. 5/8" HIGH ABUSE FIRE SHIELD TO BE PROVIDED AT SERVICE BAYS.
3. NOT USED.
4. NOT USED.
5. ELECTRICAL SERVICE ENTRANCE, PAINTED.
6. EXHAUST VENT CAP, REFEER TO MECHANICAL DRAWINGS FOR ADDITIONAL INFORMATION
7. ASPHALT SHINGLE ROOF OVER UNDERLAYMENT AND SHEATHING.
8. PAINTED GALV. METAL GUTTER AND DOWNSPOUTS.
9. SIGNAGE LOCATION BY SEPARATE PERMIT.
10. WALL MOUNTED LIGHT FIXTURE.
11. WALL MOUNTED CAMERA.
12. PROVIDE PAINT GRIP AT FASCIA, SOFFIT, AND TRIM PRIOR TO PAINTING. 1
13. "VERSETTA STONE" STONE SILL (TAUPE)
14. PAINTED 6" DIA. STEEL PIPE BOLLARD.
15. LANE INDICATOR PANEL.
16. VENTS THROUGH ROOF - VERIFY QUANTITY AND LOCATION, REFER TO PLUMBING PLANS FOR ADDITIONAL INFORMATION
17. HOSE BIB, REFER TO PLUMBING DRAWINGS FOR ADDITIONAL INFORMATION.
18. SECOND LAYER OF HARDI BOARD SIDING TRIM.
19. ALUMINUM STOREFRONT DOOR.
20. HOLLOW CORE METAL DOOR, PAINTED.
21. MECHANICAL YARD, 4" CONC. SLAB, PAINTED 3"x3"x4'-0" TUBE STEEL POSTS AND 4" COMPOSITE VERTICAL SLAT SCREENING FENCE. REFER TO DETAIL 3 SHEET A-2.1 FOR ADDITIONAL INFORMATION.
22. ROLE UP METAL DOOR, PAINTED.

EXTERIOR FINISHES

JAMES HARDIE BOARD AND BATTEN SIDING	JAMES HARDIE BOARD AND BATTEN SIDING (SW6108 COLOR) 1
STONE WAINSCOT: (GRADE TO PRECAST SILL)	"VERSETTA STONE" LEDGESTONE STYLE (TAUPE)
PRECAST SILL:	"VERSETTA STONE" STONE SILL (TAUPE)
COPING, SOFFIT & TRIM:	PAINT GRIP 1
ROOF SCUPPERS & DOWNSPOUTS:	DIMENSIONAL METALS, INC. - PAINT COLOR TO MATCH EXTERIOR FINISH
STOREFRONT SYSTEM:	2x4-1/2" OLD CASTLE 3000 SERIES OR OWNER APPROVED EQUAL ALUMINUM STOREFRONT SYSTEM W/1" INSULATED GLAZING.
H.M. DOORS & FRAMES:	FIELD PAINT W/ SHERWIN-WILLIAMS B66-1300 PRO-CYRL PRIMER FOLLOWED BY (2) FINISH COATS OF B66-300 SHER-CYRL HPA. COLOR SHALL BE SW-7515 "HOMESTEAD BROWN". VERIFY COLOR WITH OWNER
O.H. DOOR FINISH:	CLEAR ANODIZED ALUMINUM

SIGNAGE SCHEDULE

NUMBER	DESCRIPTION	SIZE	ILLUMINATED	QUANTITY
600	LOGO SIGN	7'-8" x 5'-11" (45 SF)	INTERNALLY	3
	PROVIDED BY OWNER, INSTALLED BY SIGN CONTRACTOR			
601	LANE INDICATOR SIGN	10'-0" x 1'-0" (10 SF)	NO	3
	PROVIDED BY OWNER, INSTALLED BY SIGN CONTRACTOR			
602	OPEN SIGN	2'-7 1/2" x 11 1/2" (2.52 SF)	INTERNALLY	1
	PROVIDED BY OWNER, INSTALLED BY SIGN CONTRACTOR			
	PROVIDED BY OWNER, INSTALLED BY SIGN CONTRACTOR			

BRAMIC DESIGN GROUP PLLC
8003 S. GALILEO LN.
TUCSON, AZ 85747
PHONE: (520) 401-9183

COPYRIGHT NOTICE
This drawing is the property of the above referenced Professional and is not to be used for any purpose other than the specific project and site names herein, and cannot be reproduced in any manner without the express written permission from the Professional.

DATE	ISSUE
05.17.24	OWNER REVIEW SET

	DATE	REVISION
1	07.08.24	C.O.T. COMMENTS

PROFESSIONAL SEAL

REGISTERED ARCHITECT CERTIFICATE NO. 15939 GENE GOLDSTEIN Date Signed 05.17.24 ARIZONA U.S.A. Expires 12.31.25

PROFESSIONAL LICENSE NO:
ARIZONA 15939
CERTIFICATE OF AUTHORIZATION NO:

PROFESSIONAL IN CHARGE
GENE GOLDSTEIN A.I.A.

PROJECT MANAGER
KYLE VILAUBI

QUALITY CONTROL
KYLE VILAUBI, GENE GOLDSTEIN

DRAWN BY
KYLE VILAUBI

PROJECT ADDRESS
2920 S. PARK AVE
TUCSON ARIZONA 85713

VALVOLINE INSTANT OIL CHANGE

BDG PROJECT NUMBER
23-849

SHEET NAME
EXTERIOR ELEVATIONS

SHEET #
A-3.2

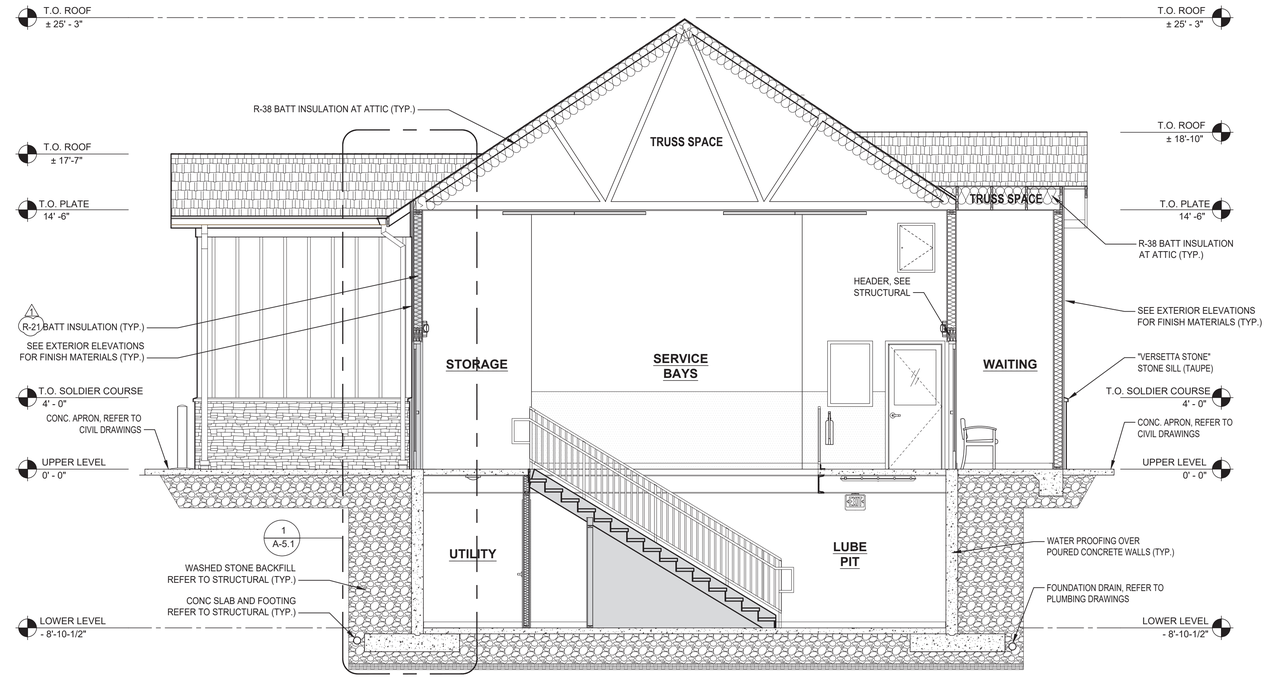

1 A-4.1 BUILDING SECTION
Scale: 1/4" = 1'-0"

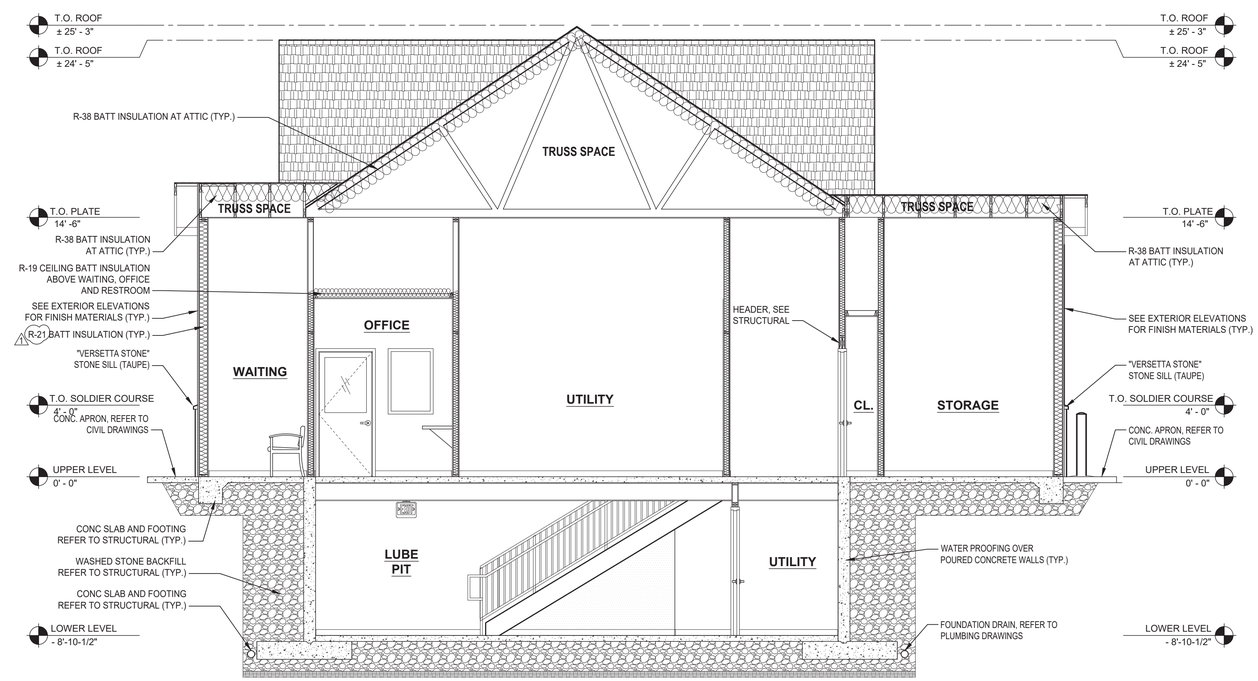

2 A-4.1 BUILDING SECTION
Scale: 1/4" = 1'-0"

BRAMIC DESIGN GROUP PLLC
8003 S. GALILEO LN.
TUCSON, AZ 85747
PHONE: (520) 401-9183

COPYRIGHT NOTICE
This drawing is the property of the above referenced Professional and is not to be used for any purpose other than the specific project and site names herein, and cannot be reproduced in any manner without the express written permission from the Professional.

DATE	ISSUE
05.17.24	OWNER REVIEW SET

	DATE	REVISION
1	07.08.24	C.O.T. COMMENTS

PROFESSIONAL SEAL

REGISTERED ARCHITECT
CERTIFICATE NO.
15939
GENE
GOLDSTEIN
Date Signed 05.17.24
ARIZONA U.S.A.
Expires 12.31.25

PROFESSIONAL LICENSE NO:
ARIZONA 15939
CERTIFICATE OF AUTHORIZATION NO:

PROFESSIONAL IN CHARGE
GENE GOLDSTEIN A.I.A.

PROJECT MANAGER
KYLE VILAUBI

QUALITY CONTROL
KYLE VILAUBI, GENE GOLDSTEIN

DRAWN BY
KYLE VILAUBI

PROJECT ADDRESS
2920 S. PARK AVE
TUCSON ARIZONA 85713

Valvoline
Instant Oil Change

VALVOLINE INSTANT OIL CHANGE

BDG PROJECT NUMBER
23-849

SHEET NAME
BUILDING SECTIONS

SHEET #
A-4.1

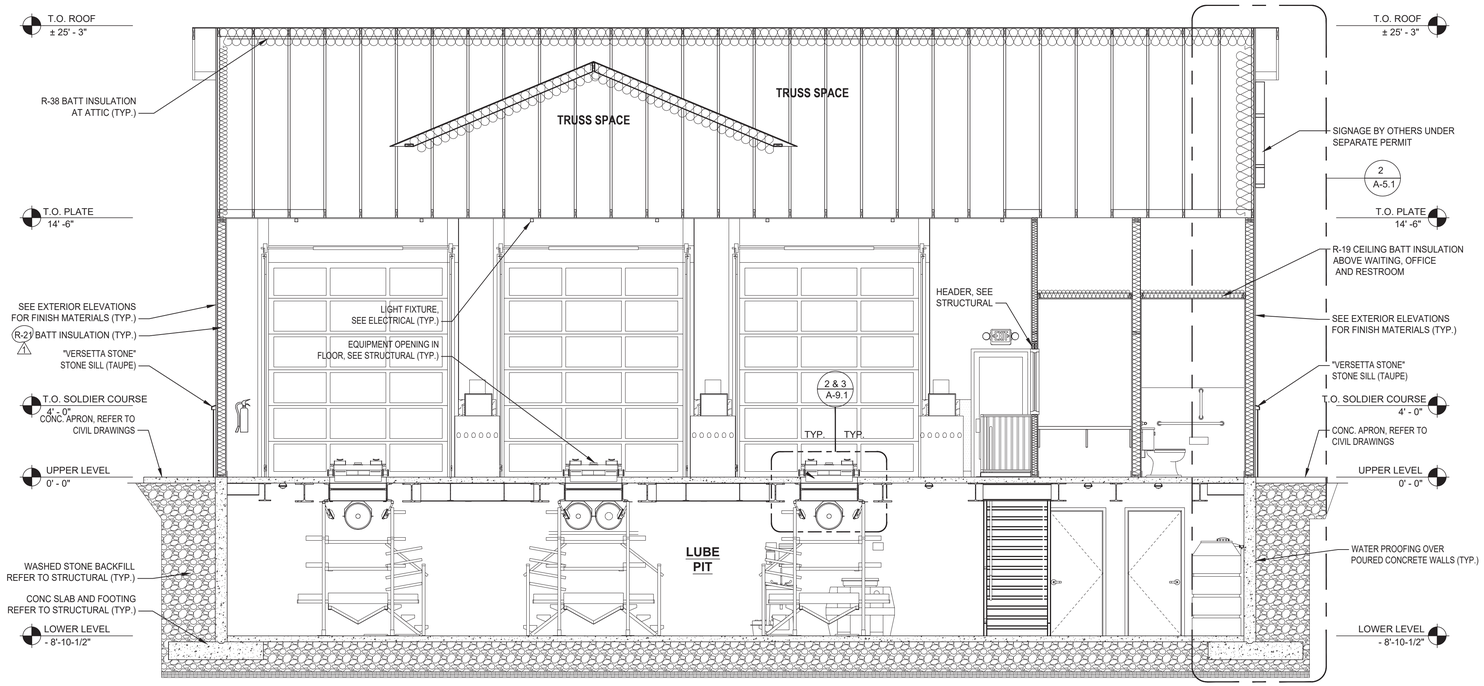

1 / A-4.2 BUILDING SECTION
Scale: 1/4" = 1'-0"

BRAMIC DESIGN GROUP PLLC
8003 S. GALILEO LN.
TUCSON, AZ 85747
PHONE: (520) 401-9183

COPYRIGHT NOTICE
This drawing is the property of the above referenced Professional and is not to be used for any purpose other than the specific project and site names herein, and cannot be reproduced in any manner without the express written permission from the Professional.

DATE	ISSUE
05.17.24	OWNER REVIEW SET

DATE	REVISION
07.08.24	C.O.T. COMMENTS

PROFESSIONAL SEAL

REGISTERED ARCHITECT
CERTIFICATE NO.
15939
GENE
GOLDSTEIN
Date Signed 05.17.24
ARIZONA U.S.A.
Expires 12.31.25

PROFESSIONAL LICENSE NO:
ARIZONA 15939
CERTIFICATE OF AUTHORIZATION NO:

PROFESSIONAL IN CHARGE
GENE GOLDSTEIN A.I.A.

PROJECT MANAGER
KYLE VILAUBI

QUALITY CONTROL
KYLE VILAUBI, GENE GOLDSTEIN

DRAWN BY
KYLE VILAUBI

PROJECT ADDRESS
2920 S. PARK AVE
TUCSON ARIZONA 85713

Valvoline
Instant Oil Change

VALVOLINE INSTANT OIL CHANGE

BDG PROJECT NUMBER
23-849

SHEET NAME
BUILDING SECTIONS

SHEET #
A-4.2

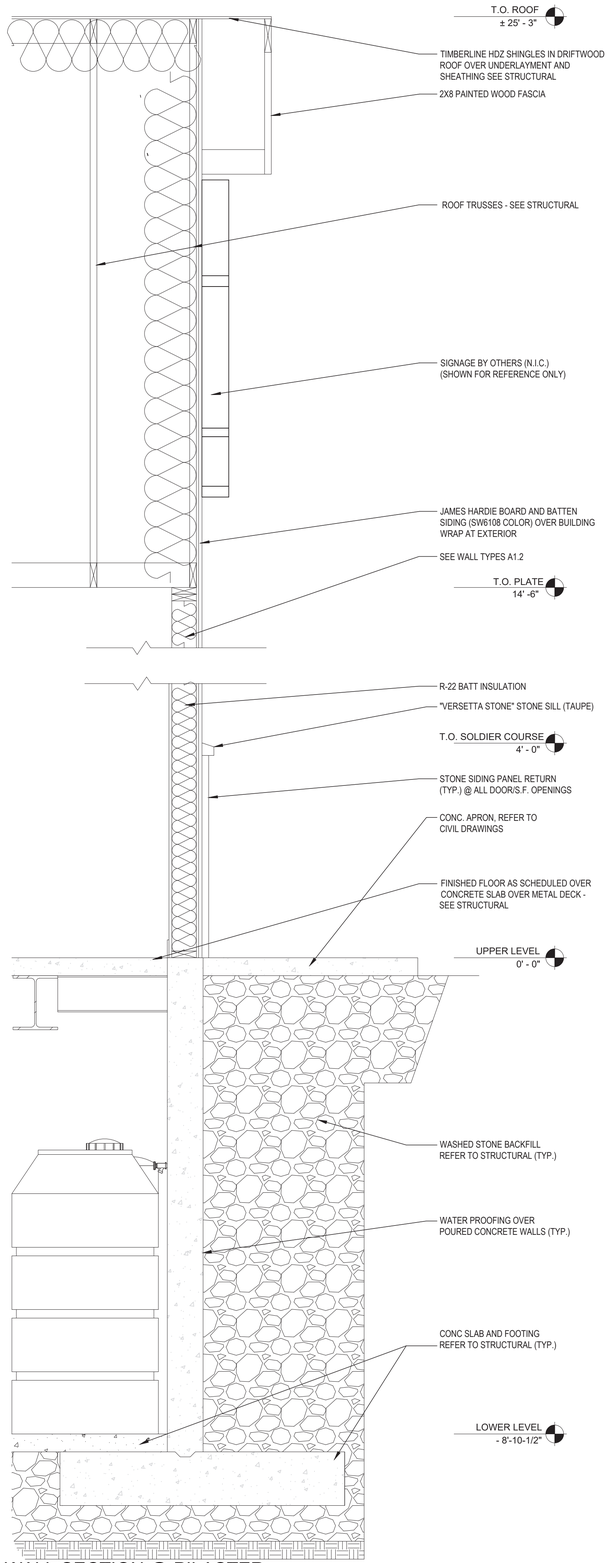

3 A-5.1 WALL SECTION @ PILASTER
Scale: 3/4" = 1'-0"

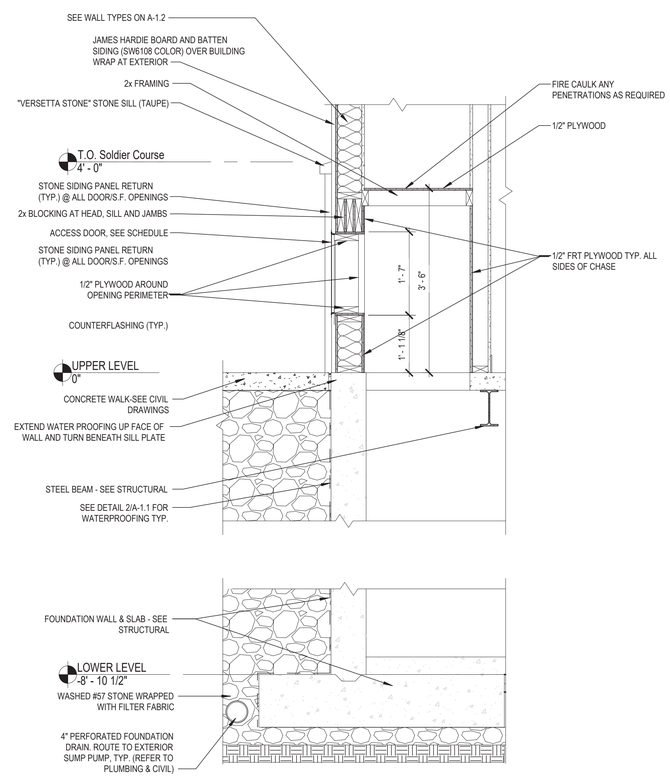

2 A-5.1 WALL SECTION @ ACCESS PANEL
Scale: 3/4" = 1'-0"

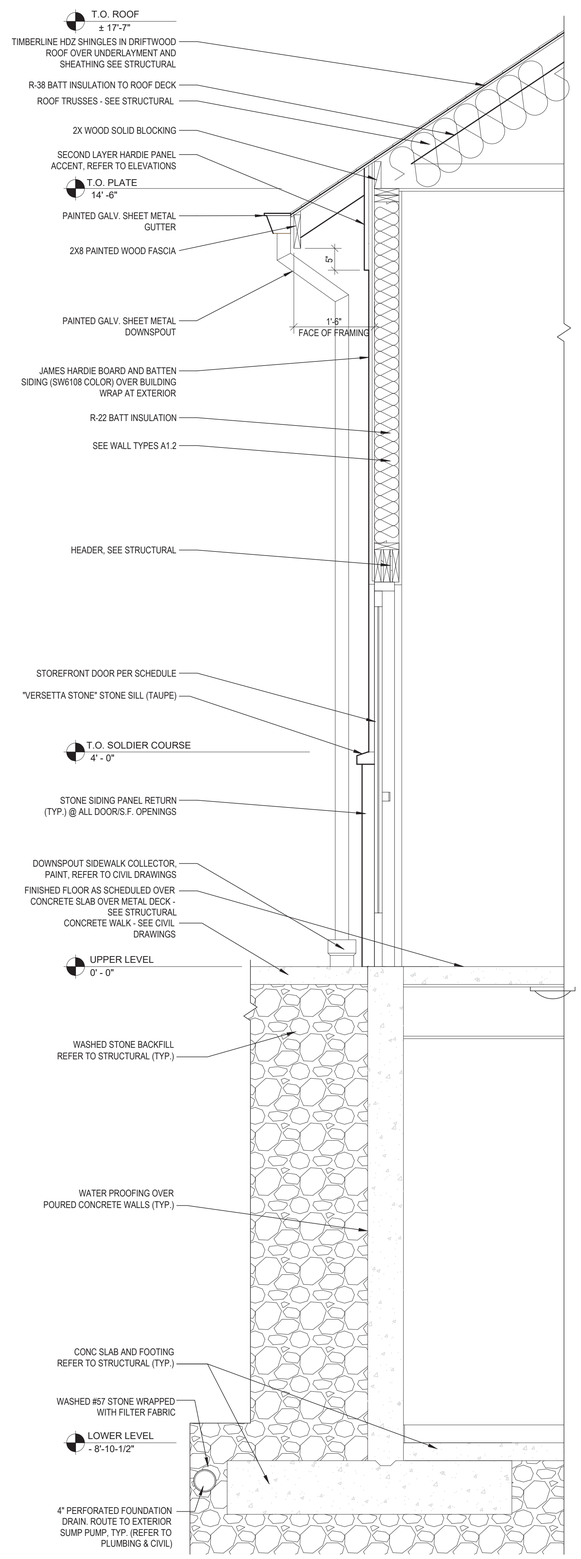

1 A-5.1 WALL SECTION @ PILASTER
Scale: 3/4" = 1'-0"

STONE- HARDIE PANEL OPTION

BRAMIC DESIGN GROUP PLLC
8003 S. GALILEO LN.
TUCSON, AZ 85747
PHONE: (520) 401-9183

COPYRIGHT NOTICE
This drawing is the property of the above referenced Professional and is not to be used for any purpose other than the specific project and site names herein, and cannot be reproduced in any manner without the express written permission from the Professional.

DATE	ISSUE
05.17.24	ISSUED FOR PERMIT REVIEW SET

	DATE	REVISION
1	07.08.24	C.O.T. COMMENTS

PROFESSIONAL SEAL

REGISTERED ARCHITECT
CERTIFICATE NO. 15939
GENE GOLDSTEIN
Date Signed 05.17.24
ARIZONA U.S.A.
Expires 12.31.25

PROFESSIONAL LICENSE NO:
ARIZONA 15939
CERTIFICATE OF AUTHORIZATION NO:

PROFESSIONAL IN CHARGE
GENE GOLDSTEIN

PROJECT MANAGER
KYLE VILAUBI

QUALITY CONTROL
KYLE VILAUBI, GENE GOLDSTEIN

DRAWN BY
KYLE VILAUBI / JON WADE

PROJECT ADDRESS
2920 S. PARK AVE
TUCSON ARIZONA 85713

Valvoline Instant Oil Change

VALVOLINE INSTANT OIL CHANGE

BDG PROJECT NUMBER
23-849

SHEET NAME
WALL SECTIONS

SHEET #
A-5.1

BIM 360:/VOIC Project/BLHAZ Arch.rvt
13-07-2023 17:20:49

DOOR SCHEDULE

DOOR NO.	ROOM NAME	DOOR: NOMINAL OPENING WIDTH	DOOR: NOMINAL OPENING HEIGHT	DOOR: TYPE	DOOR: MATERIAL	DOOR: FINISH	FRAME: TYPE	FRAME: MATERIAL	FRAME: FINISH	DETAILS: HEAD	DETAILS: JAMB	DETAILS: THRESHOLD	FIRE RATING	SET #	COMMENTS
D1	UTILITY ROOM	3' - 0"	7' - 0"	B	HM	PT-2	F2	HM	PT-2	19/A-6.2	17/A-6.2	--	--	H6	SEE NOTES 1 & 12
D2	CLOSET	3' - 0"	7' - 0"	B	HM	PT-2	F2	HM	PT-2	19/A-6.2	17/A-6.2	--	--	H6	SEE NOTES 1 & 12
D3	WAITING	3' - 0"	7' - 0"	A	AL/GL	CLEAR ANODIZED	--	ALUM.	CLEAR ANODIZED	18/A-6.2	16/A-6.2	15/A-6.2	--	H2	SEE NOTES 1, 2, 3, 4, 5, 8, 9 & 11
D4	WAITING	3' - 0"	7' - 0"	A	AL/GL	CLEAR ANODIZED	--	ALUM.	CLEAR ANODIZED	18/A-6.2	16/A-6.2	15/A-6.2	--	H2	SEE NOTES 1 & 8
D5	UNISEX RESTROOM	3' - 0"	7' - 0"	B	HM	PT-2	F2	HM	PT-2	19/A-6.2	17/A-6.2	--	--	H6	SEE NOTES 1 & 12
D6	OFFICE	3' - 0"	7' - 0"	C	HM/GL	PT-2	F2	HM	PT-2	19/A-6.2	17/A-6.2	--	--	H5	SEE NOTES 1, 11, & 12
D7	SERVICE BAYS	3' - 0"	7' - 0"	A	AL/GL	SEE SCHEDULE A-3.1	F3	ALUM.	SEE SCHEDULE A-3.1	5/A-6.2	2/A-6.2	1/A-6.2	--	H1	SEE NOTES 1, 2, 3, 4, 5, 8, 9 & 11
D8	CLOSET	3' - 0"	7' - 0"	B	HM	PT-2	F2	HM	PT-2	19/A-6.2	17/A-6.2	--	--	H8	SEE NOTES 1 & 12
D9	UTILITY ROOM	3' - 0"	7' - 0"	B	HM	PT-2	F2	HM	PT-2	19/A-6.2	17/A-6.2	--	--	H6	SEE NOTES 1 & 12
D10	STORAGE	4' - 4"	7' - 0"	E	M	PT-1	--	--	--	--	--	--	--	--	ROLL UP DOOR
D11	SERVICE BAYS	10' - 0"	12' - 0"	D	--	SEE SCHEDULE A-3.1	--	--	SEE SCHEDULE A-3.1	13/A-6.2	12/A-6.2	11/A-6.2	--	H7	SEE NOTES 6 & 9
D12	SERVICE BAY	3' - 0"	7' - 0"	B	HM	PT-2	F3	HM	PT-2	8/A-6.2	7/A-6.2	6/A-6.2	--	H1	

DOOR TYPES

S.G. = SAFETY GLAZING
T. = TEMPERED GLAZING
T.I. = TEMPERED INSULATED GLAZING

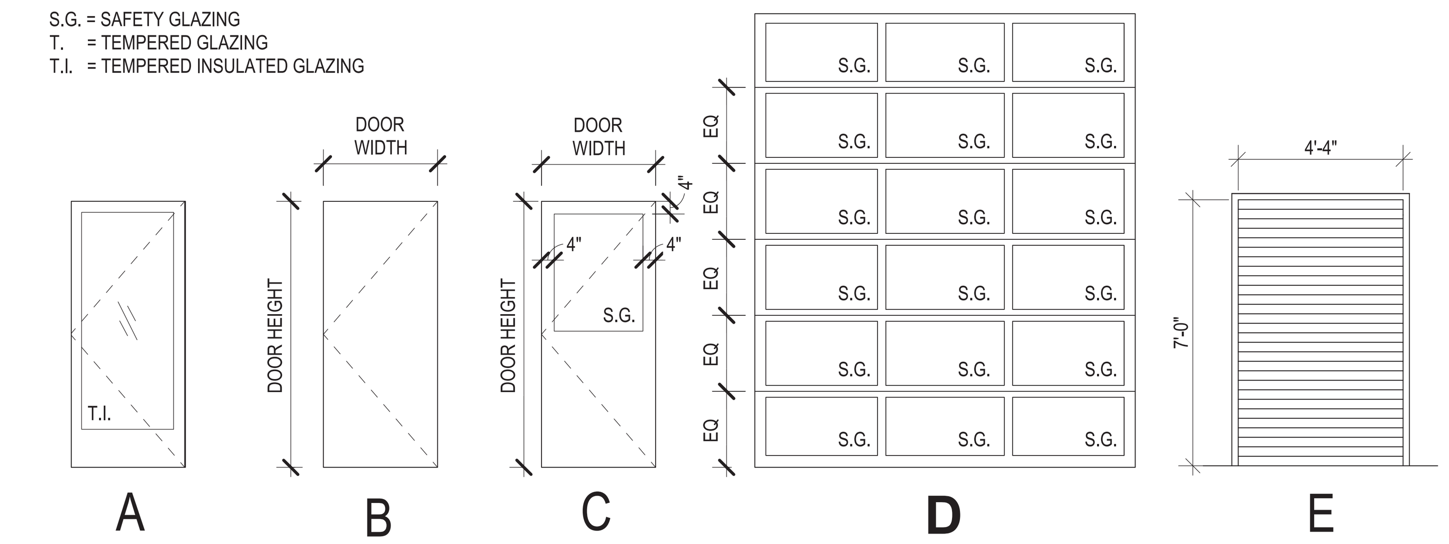

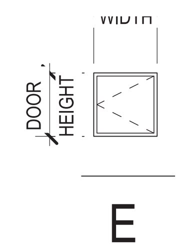

ALL TYPE "A", "B", AND "C" DOOR SHALL:
1. BE ADJUSTED SO THAT FROM AN OPEN POSITION OF 90 DEGREES, THE TIME REQUIRED TO MOVE THE DOOR TO A POSITION OF 12 DEGREES FROM THE LATCH IS 5 SECONDS MIN.
2. THE MINIMUM OPENING FORCE TO PULL OR PUSH OPEN THE DOOR SHALL BE 5 POUNDS MAXIMUM.

NOTE: FOR ALL OVERHEAD DOOR PRODUCTS AND HARDWARE CONTACT THE VALVOLINE OVERHEAD DOOR NATIONAL ACCOUNT MANAGER:
ANGELA BURGESS, SR. PROJECT MANAGER, NATIONAL ACCOUNTS
2501 S. STATE HWY 121, SUITE 200
LEWISVILLE, TX 75067
angela_burgess@overheaddoor.com
800-972-1730 OPTION 2
DIRECT: 469-549-7121 CELL: 214-577-7860

NOTE: CLOPAY BUILDING PRODUCTS IS AN ACCEPTABLE ALTERNATE TO OVERHEAD DOOR PRODUCTS UTILIZING THE SAME DESIGN CRITERIA.
CONTACT:
CHRIS REMICK CSI, CDT - BUSINESS DEVELOPMENT MANAGER
cremick@clopay.com
614-306-9968

DOOR REMARKS/ NOTES

1. ALL "MAN DOOR" HARDWARE SHALL BE HANDICAP ACCESSIBLE.
2. EXIT DOORS SHALL BE OPERABLE FROM THE INSIDE WITHOUT THE USE OF A KEY, SPECIAL KNOWLEDGE OR EFFORT. LOCKING DEVICE MUST BE A TYPE THAT IS READILY DISTINGUISHABLE AS LOCKED. COMPLY W/ LOCAL BLDG.CODES.
3. PROVIDE A READILY VISIBLE, DURABLE SIGN ADJACENT TO DOOR & INSIDE BUILDING STATING: "THIS DOOR IS TO REMAIN UNLOCKED WHEN BUILDING IS OCCUPIED" AS PER LOCAL BUILDING CODE. LETTERS SHALL BE MIN. 1" HIGH ON CONTRASTING BACKGROUND.
4. ALL CYLINDERS SHALL BE COMMERCIAL GRADE BEST LOCK WITH SMALL FORMAT INTERCHANGEABLE CORE.
5. PROVIDE 2 SETS OF KEYS PER DOOR. ALL EXTERIOR DOORS SHALL BE MASTER KEYED.
6. OVERHEAD DOORS SHALL BE OVERHEAD DOOR COMPANY MODEL #521 WITH 2" TRACK AND OVERHEAD DOOR BRAND OPERATOR. MOUNT DOOR WITH MAX. LIFT CLEARANCE. DOOR INSTALLER SHALL PROVIDE WEATHER STRIPPING. PROVIDE MULTI-WALL POLYCARBONATE GLAZING WITH A "U" VALUE OF NO LESS THAN THE VALUE NOTED IN THE ENVELOPE COMPLIANCE CERTIFICATE. SEE ELECTRICAL PLAN FOR NUMBER OF PUSH BUTTONS AND LOCATION. PROVIDE LOW HEADROOM TRACKS AS REQUIRED. PROVIDE MOMENTARY PUSH BUTTONS AND LIFTMASTER CPS-U COMMERCIAL PHOTO EYES WITH PROTECTIVE STEEL GUARDS MOUNTED TO FLOOR FOR PHOTO EYE PROTECTION. G.C. TO CONTACT THE OVERHEAD DOOR NATIONAL ACCOUNT MANAGER FOR ALL OVERHEAD DOOR AND HARDWARE PROCUREMENT. (REFER TO PREFERED VENDORS LIST FOR CONTACT INFORMATION.)
7. PIT ACCESS PANELS NOTED IN SCHEDULE: NYSTROM BUILDING PRODUCTS - MODEL: XTM18X18CS (STAINLESS STL.), WITH DRIP CAP, GASKET, MASONRY ANCHORS, AND MORTISE PREPARATION. FURNISH AND INSTALL 1-1/8" MORTISE CYLINDER LOCK. (SEE NOTE 4).
8. STOREFRONT DOORS TYPE "A" SHALL BE KAWNEER MEDIUM STILE OR EQUAL W/FINISH TO MATCH ADJACENT.
9. REFER ALSO TO EXTERIOR FINISH SCHEDULE FOR EXTERIOR DOOR & FRAME FINISHES. CONTRACTOR TO BRING DISCREPANCIES TO ARCHITECT'S ATTENTION IMMEDIATELY.
10. EXTERIOR HOLLOW METAL DOORS SHALL BE INSULATED.
11. OFFICE DOOR TO BE KEYED SEPARATELY. ALL EXTERIOR ACCESS DOORS, EXTERIOR MAN DOORS, AND EXTERIOR MECHANICAL ROOM DOOR SHALL BE KEYED ALIKE.
12. INTERIOR HOLLOW METAL DOOR FRAMES SHALL HAVE A THROAT SIZED TO ACCOMODATE THE SCHEDULED WALL THICKNESS. EXTERIOR HOLLOW METAL DOOR FRAMES SHALL HAVE AN 8-1/4" JAMB DEPTH.

STOREFRONT OPENING SCHEDULE

MARK	SIZE WxH	GLAZING	FRAME	FRAME TYPE	FINISH	HEAD	JAMB	SILL	REMARKS
A	8'-0" x 10'-0"	1" INSULATING GLASS	2"x4 1/2" EXTRUDED ALUM.	F1	CLEAR ANODIZED	4/A-6.2	3/A-6.2	1/A-6.2	OLDCASTLE 3000 SERIES OR OWNER APPROVED EQUAL
B	2'-6" x 3'-8"	1" INSULATING GLASS	2"x4 1/2" EXTRUDED ALUM.	F6	CLEAR ANODIZED	4/A-6.2 SIM	3/A-6.2 SIM	3/A-6.1	OLDCASTLE 3000 SERIES OR OWNER APPROVED EQUAL

STOREFRONT & DOOR FRAME TYPES

S.G. = SAFETY GLAZING
T. = TEMPERED GLAZING
T.I. = TEMPERED INSULATED GLAZING

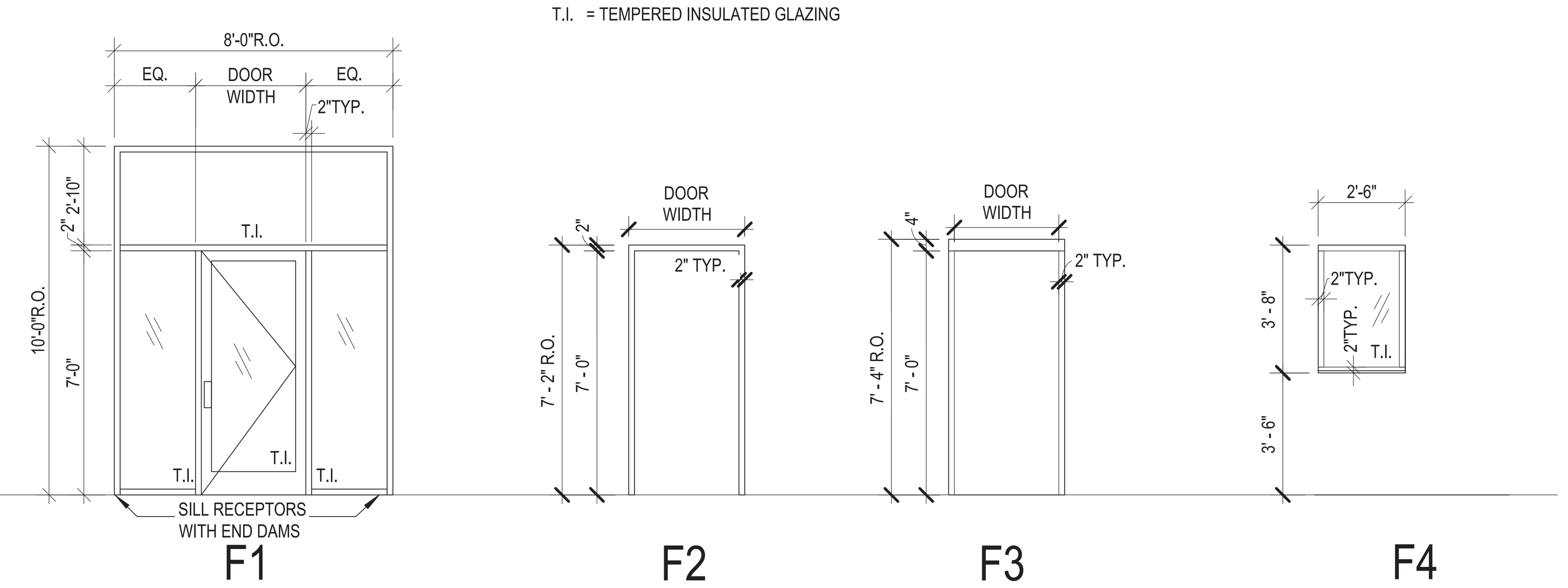

STOREFRONT NOTES

1. PROVIDE TEMPERED OR SAFETY GLAZING FOR GLAZING IN HAZARDOUS LOCATIONS SUCH AS: GLASS DOORS, ADJACENT TO WALKING SURFACES, ADJACENT TO DOORS, AS PER BUILDING CODE.
2. GLAZING ADJACENT A DOOR WHERE THE NEAREST VERTICAL EDGE IS WITHIN A 24" RADIUS OF THE DOOR IN A CLOSED POSITION AND WHOSE BOTTOM EDGE IS LESS THAN 60" ABOVE THE FLOOR OR WALKING SURFACE MUST BE TEMPERED GLAZING.
3. FIELD VERIFY ALL ROUGH OPENINGS PRIOR TO FABRICATION. SUBMIT SHOP DRAWINGS FOR APPROVAL.
4. PROVIDE SILL RECEPTOR W/ END DAMS WHERE SHOWN OR REQUIRED.
5. ALL GLASS SHALL BE CLEAR UNLESS OTHERWISE NOTED OR SPECIFIED.
6. VERIFY WIND SPEED AND IMPACT REQUIREMENTS PRIOR TO STOREFRONT AND DOOR PROCUREMENT
7. ALL GLASS SHALL BE 1" INSULATED WITH VALUES AS NOTED IN THE ENVELOPE COMPLIANCE CERTIFICATE.
8. SPANDREL PANEL/FILM TO BE BLACK.

DOOR HARDWARE

ENTRY AND SERVICE	SET H1:	1 SET 1 SET 1 1 1 SET 1 1 1 1	OFFSET PIVOTS WEATHER-STRIP CLOSER THRESHOLD PUSH/PULL DEADLOCK EXIT INDICATOR THUMB TURN CYLINDER	KAWNEER KAWNEER NORTON KAWNEER KAWNEER ADAMS RITE ADAMS RITE ADAMS RITE BEST	TOP, BOTTOM & INTERMEDIATE (FINISH TO MATCH DOOR) SEALAIR 1601 SERIES ADA COMPLIANT (FINISH TO MATCH DOOR) 4"x 1/2" OFFSET (FINISH TO MATCH DOOR) CLASSIC CP-II, CO-12 (FINISH TO MATCH DOOR) MS1850S 4089 (FINISH TO MATCH DOOR) 4066 (FINISH TO MATCH DOOR) 1E74 - R708 1/2" TRIM RING (FINISH TO MATCH DOOR)
WAITING	SET H2:	1 SET 1 1 1 SET 1	OFFSET PIVOTS CLOSER THRESHOLD PUSH/PULL DOOR STOP	KAWNEER NORTON KAWNEER KAWNEER KAWNEER	TOP, BOTTOM & INTERMEDIATE (FINISH TO MATCH DOOR) 1601 SERIES ADA COMPLIANT (FINISH TO MATCH DOOR) 4" x 1/2" OFFSET (FINISH TO MATCH DOOR) CLASSIC CP-II, CO-12 (FINISH TO MATCH DOOR) FLOOR MOUNTED (FINISH TO MATCH DOOR)
MECHANICAL	SET H3:	(2) 1 1/2 PR. 1 1 1 1 2 2 1 1 2	HINGES PANIC DEVICE CYLINDER CLOSER THRESHOLD DOOR SWEEP WEATHER STRIP ASTRAGAL FLUSH BOLTS KICK DOWN HOLDER	HAGER VON DUPRIN BEST LCN NAT. GD. NAT. GD. NAT. GD. TRADEMARK HARDWARE ROCKWOOD IVES	BB1279 4.5 x 4.5 US26D 99NL x US26D (TYPE AS REQUIRED - US26D) 4041XP x AL 425 - MILL FINISH 101-VA-ALUMINUM 190 FATT P357SP84xS88bl7-GALV. 555 LEVER EXTENTION BOLT US26D ON INTERACTIVE LEAF IN FRONT OF COMPRESSOR FS 555-SP28
UTILITY AND CLOSET	SET H4:	1 1/2 PR. 1 1 1	HINGES LOCKSET CLOSER DOOR STOP	HAGER BEST LCN TRIMCO	BB1279 4.5 x 4.5 US26D 9K3ON 15D S3 x 626 - PASSAGE 4040XP x AL W1211 x US32D
OFFICE	SET H5:	1 1/2 PR. 1 1 1 1	HINGES LOCKSET CYLINDER CLOSER DOOR STOP	HAGER BEST BEST LCN TRIMCO	BB1279 4.5 x 4.5 USP x AMS x US26D 9K37AB 15D S3 x 626 - ENTRANCE (TYPE AS REQUIRED - 626) 4040XP x AL W1211 x US32D
UNISEX RESTROOM AND CHANGING ROOM	SET H6:	1 1/2 PR. 1 1 1	HINGES LOCKSET CLOSER DOOR STOP	HAGER BEST LCN TRIMCO	BB1279 4.5 x 4.5 US26D 9K30L 15D S3 x 626 - PRIVACY 4040XP x AL (OMIT AT DOOR D1) W1211 x US32D
BAY DOORS	SET H7:				HARDWARE SET AS PER MANUFACTURER. SEE NATIONAL ACCOUNT INFORMATION AND DOOR REMARKS / NOTES.
DRUM TRANSFER	SET H8:	1 1/2 PR. 1 1 1	HINGES LOCKSET CYLINDER DOOR STOP	HAGER BEST BEST TRIMCO	BB1279 4.5 x 4.5 US26D 9K37R 15D S3 x 626 - CLASSROOM (TYPE AS REQUIRED - 626) W1211 x US32D

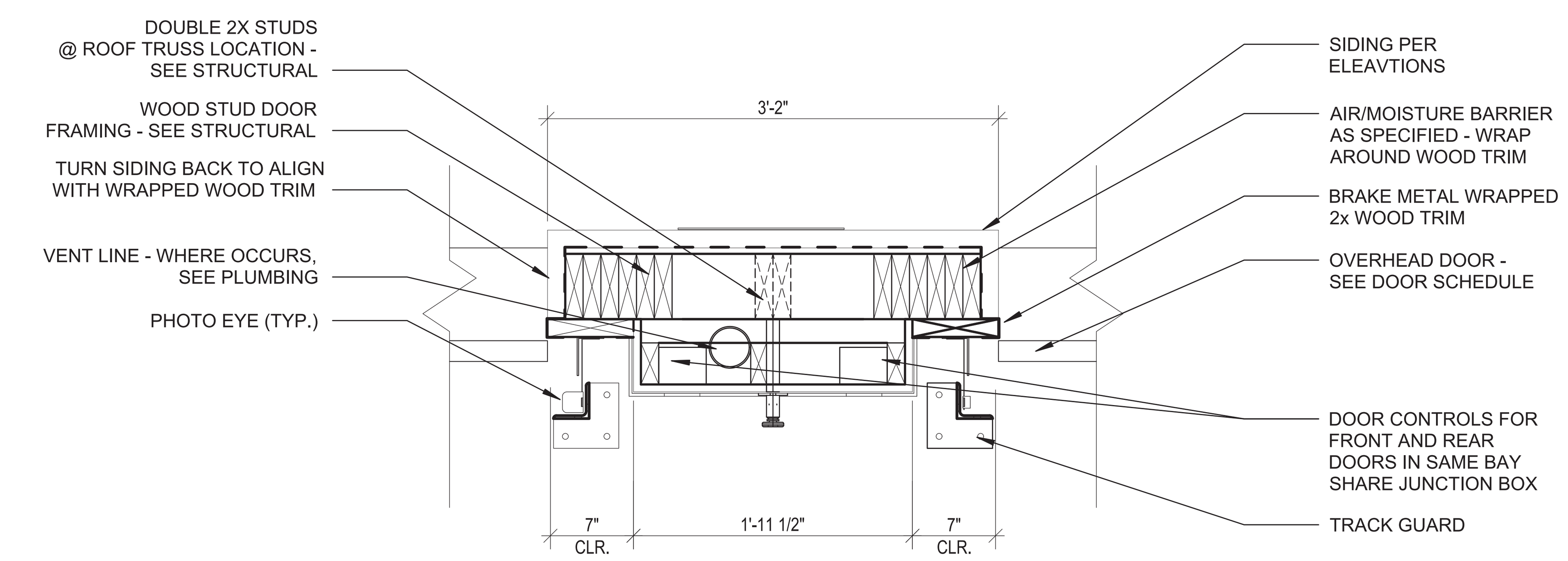

5 A-6.1 PIER DETAIL - BRICK
Scale: 1" = 1'-0"

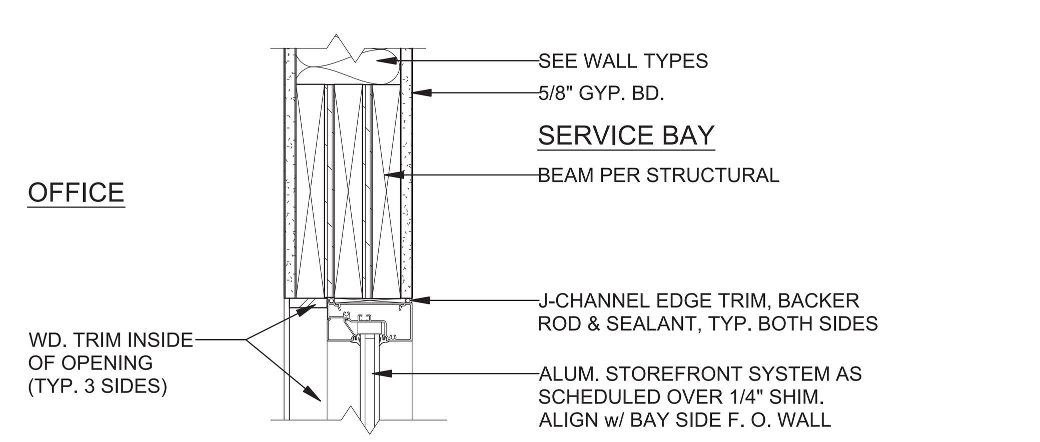

4 A-6.1 INTERIOR S.F. HEAD/ JAMB DETAIL
Scale: 1 1/2" = 1'-0"

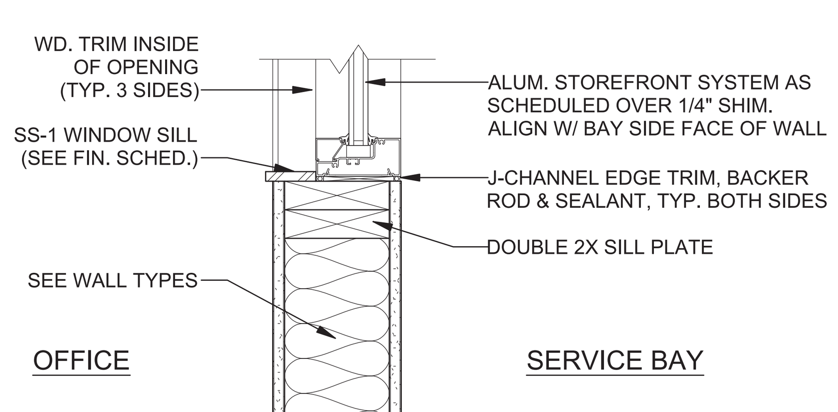

3 A-6.1 INTERIOR S.F. SILL DETAIL
Scale: 1 1/2" = 1'-0"

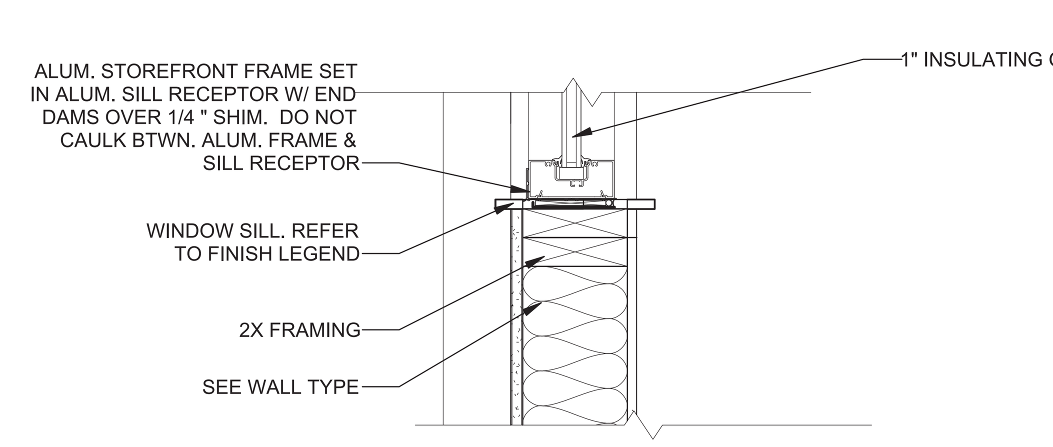

2 A-6.1 STOREFRONT OPENING SILL DETAIL
Scale: 1 1/2" = 1'-0"

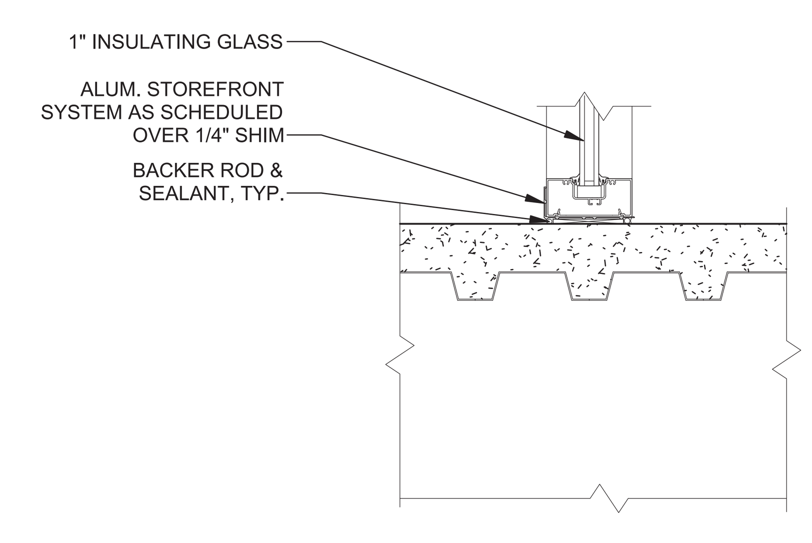

1 A-6.1 STOREFRONT OPENING SILL DETAIL
Scale: 1 1/2" = 1'-0"

STONE- HARDIE PANEL OPTION

BRAMIC DESIGN GROUP PLLC
8003 S. GALILEO LN.
TUCSON, AZ 85747
PHONE: (520) 401-9183

COPYRIGHT NOTICE
This drawing is the property of the above referenced Professional and is not to be used for any purpose other than the specific project and site names herein, and cannot be reproduced in any manner without the express written permission from the Professional.

DATE	ISSUE
05.17.24	ISSUED FOR PERMIT REVIEW SET

DATE	REVISION
07.08.24	C.O.T. COMMENTS

PROFESSIONAL SEAL
REGISTERED ARCHITECT CERTIFICATE NO. 15939 GENE GOLDSTEIN Date Signed 05.17.24 ARIZONA U.S.A. Expires 12.31.25

PROFESSIONAL LICENSE NO:
ARIZONA 15939
CERTIFICATE OF AUTHORIZATION NO:

PROFESSIONAL IN CHARGE
GENE GOLDSTEIN

PROJECT MANAGER
KYLE VILAUBI

QUALITY CONTROL
KYLE VILAUBI, GENE GOLDSTEIN

DRAWN BY
KYLE VILAUBI / JON WADE

PROJECT ADDRESS
2920 S. PARK AVE
TUCSON ARIZONA 85713

VALVOLINE INSTANT OIL CHANGE

BDG PROJECT NUMBER
23-849

SHEET NAME
DOOR - SF SCHEDULES AND DETAILS

SHEET #
A-6.1

13-07-2023 17:27:13 BIM 360://VIOC Proto/3BLH-AZ Arch.rvt

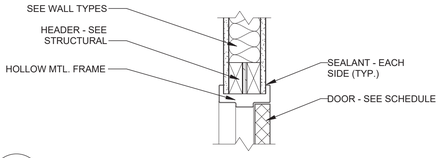

19 A-6.2 INTERIOR DOOR HEAD DETAIL
Scale: 1 1/2" = 1'-0"

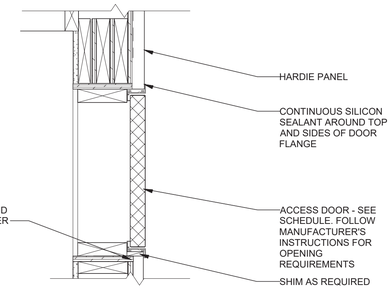

10 A-6.2 ACCESS DOOR HEAD / JAMB DETAIL
Scale: 1 1/2" = 1'-0"

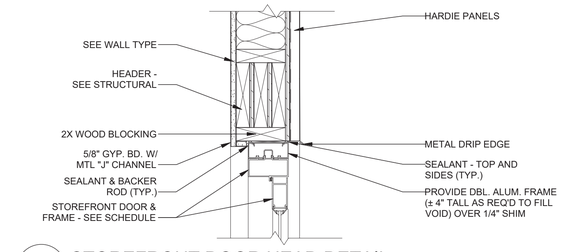

5 A-6.2 STOREFRONT DOOR HEAD DETAIL
Scale: 1 1/2" = 1'-0"

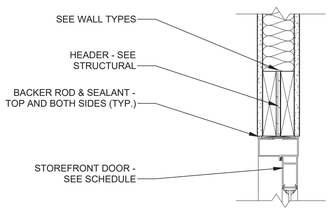

18 A-6.2 INTERIOR STOREFRONT DOOR HEAD DETAIL
Scale: 1 1/2" = 1'-0"

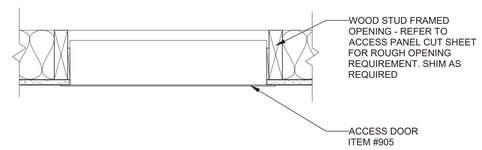

9 A-6.2 ACCESS PANEL DETAIL
Scale: 1 1/2" = 1'-0"

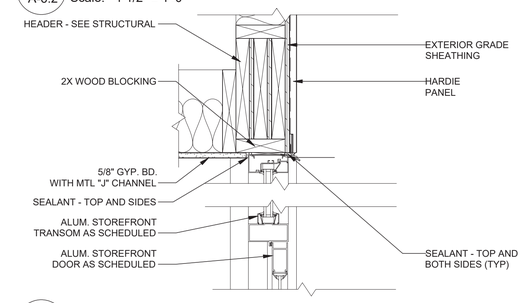

4 A-6.2 STOREFRONT DOOR TRANSOM DETAIL
Scale: 1 1/2" = 1'-0"

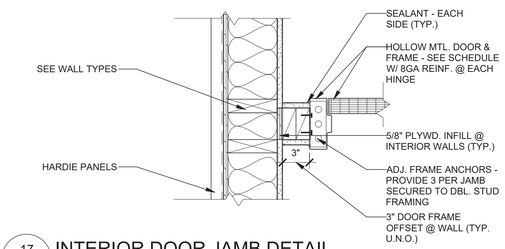

17 A-6.2 INTERIOR DOOR JAMB DETAIL
Scale: 1 1/2" = 1'-0"

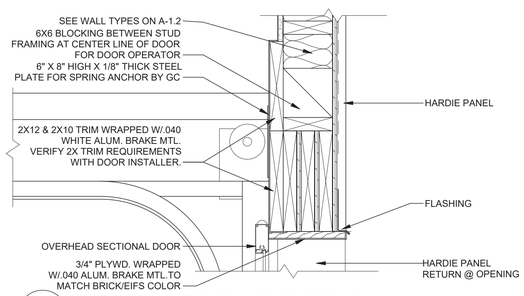

13 A-6.2 OVERHEAD DOOR HEAD DETAIL
Scale: 1 1/2" = 1'-0"

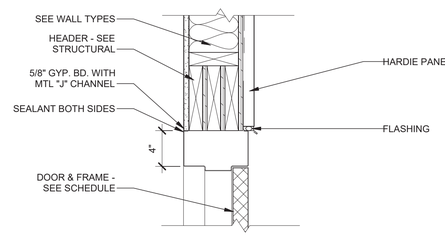

8 A-6.2 DOOR HEAD DETAIL
Scale: 1 1/2" = 1'-0"

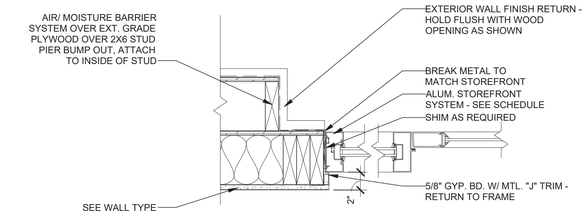

3 A-6.2 STOREFRONT JAMB / SIDELITE DETAIL
Scale: 1 1/2" = 1'-0"

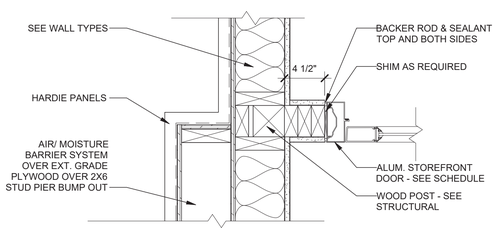

16 A-6.2 INTERIOR DOOR JAMB DETAIL
Scale: 1 1/2" = 1'-0"

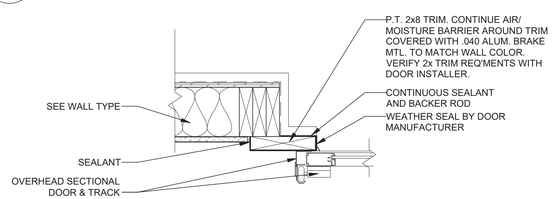

12 A-6.2 OVERHEAD DOOR JAMB DETAIL
Scale: 1 1/2" = 1'-0"

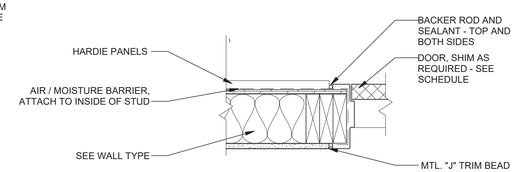

7 A-6.2 EXTERIOR DOOR JAMB DETAIL
Scale: 1 1/2" = 1'-0"

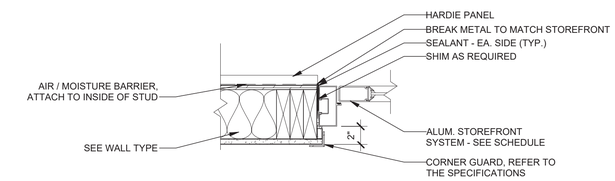

2 A-6.2 STOREFRONT DOOR JAMB DETAIL
Scale: 1 1/2" = 1'-0"

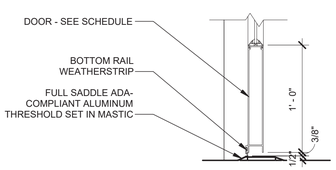

15 A-6.2 INTERIOR DOOR THRESHOLD
Scale: 1 1/2" = 1'-0"

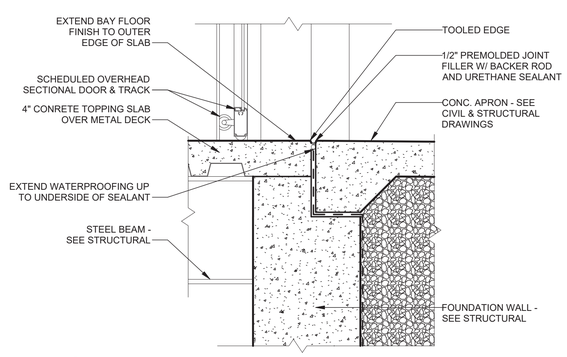

11 A-6.2 OVERHEAD DOOR THRESHOLD DETAIL
Scale: 1 1/2" = 1'-0"

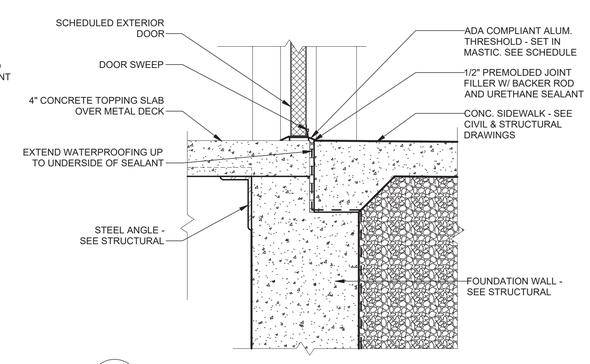

6 A-6.2 EXTERIOR DOOR THRESHOLD DETAIL
Scale: 1 1/2" = 1'-0"

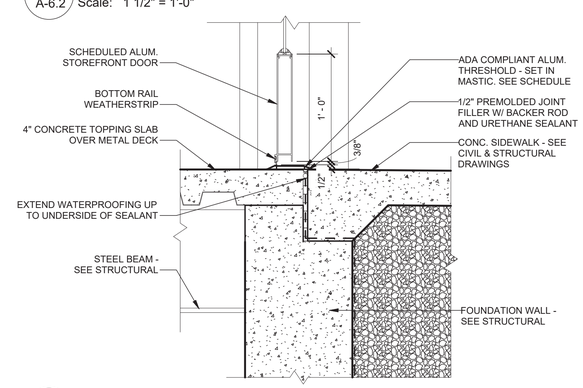

1 A-6.2 STOREFRONT DOOR THRESHOLD DETAIL
Scale: 1 1/2" = 1'-0"

STONE- HARDIE PANEL OPTION

BRAMIC DESIGN GROUP PLLC
8003 S. GALILEO LN.
TUCSON, AZ 85747
PHONE: (520) 401-9183

COPYRIGHT NOTICE
This drawing is the property of the above referenced Professional and is not to be used for any purpose other than the specific project and site names herein, and cannot be reproduced in any manner without the express written permission from the Professional.

DATE	ISSUE
05.17.24	ISSUED FOR PERMIT REVIEW SET

	DATE	REVISION
1	07.08.24	C.O.T. COMMENTS

PROFESSIONAL SEAL
REGISTERED ARCHITECT CERTIFICATE NO. 15939 GENE GOLDSTEIN Date Signed 05.17.24 ARIZONA U.S.A. Expires 12.31.23

PROFESSIONAL LICENSE NO:
ARIZONA 15939
CERTIFICATE OF AUTHORIZATION NO:

PROFESSIONAL IN CHARGE
GENE GOLDSTEIN
PROJECT MANAGER
KYLE VILAUBI
QUALITY CONTROL
KYLE VILAUBI, GENE GOLDSTEIN
DRAWN BY
KYLE VILAUBI / JON WADE

PROJECT ADDRESS
2920 S. PARK AVE
TUCSON ARIZONA 85713

Valvoline Instant Oil Change

VALVOLINE INSTANT OIL CHANGE

BDG PROJECT NUMBER
23-849

SHEET NAME
DOOR DETAILS

SHEET #
A-6.2

BIM 360://VOIC Project/BLI-AZ Arch.rvt
13-07-2023 17:27:22

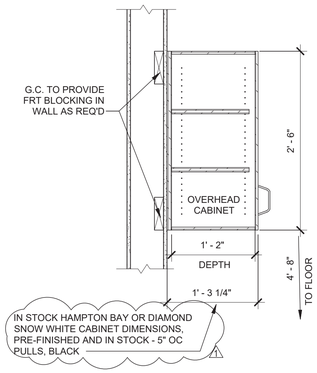

1 A-7.1 UPPER CABINET DETAIL
Scale: 1" = 1'-0"

2 A-7.1 NOT USED
Scale: 1" = 1'-0"

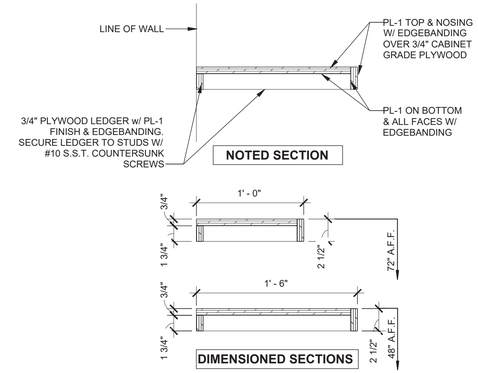

3 A-7.1 SHELVING SECTION @ DRUM TRANSFER STATION
Scale: 1 1/2" = 1'-0"

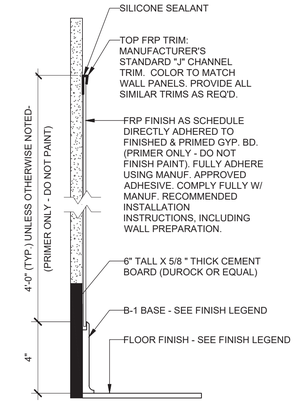

4 A-7.1 WAINSCOT DETAIL
Scale: 3" = 1'-0"

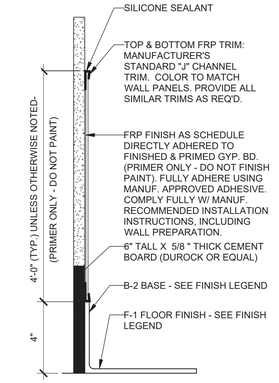

5 A-7.1 WAINSCOT DETAIL
Scale: 3" = 1'-0"

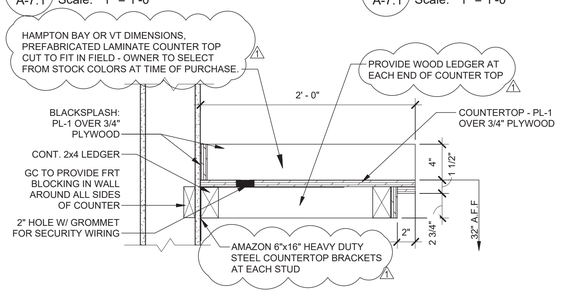

6 A-7.1 COUNTERTOP DETAIL
Scale: 1 1/2" = 1'-0"

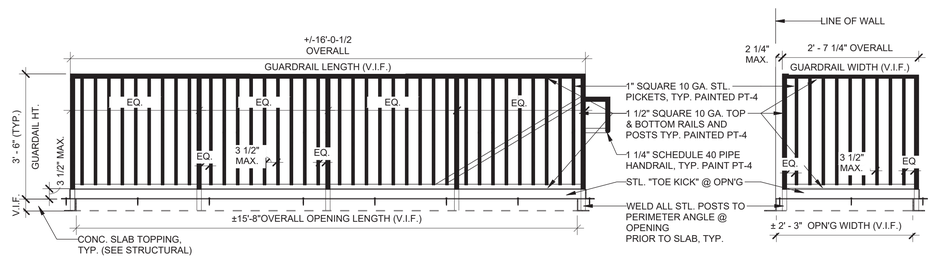

7 A-7.1 GUARDRAIL DETAIL @ STAIR OPENING
Scale: 1/2" = 1'-0"

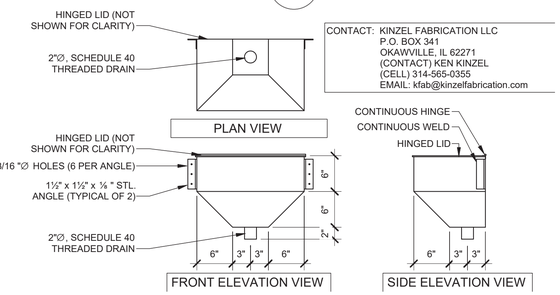

CONTACT: KINZEL FABRICATION LLC
P.O. BOX 341
OKAWVILLE, IL 62271
(CONTACT) KEN KINZEL
(CELL) 314-565-0355
EMAIL: kfab@kinzelfabrication.com

8 A-7.1 ANTIFREEZE FUNNEL DETAIL
Scale: 1" = 1'-0"

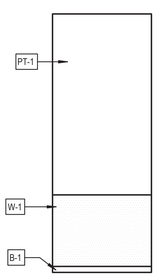

9 A-7.1 WAITING ROOM
Scale: 1/4" = 1'-0"

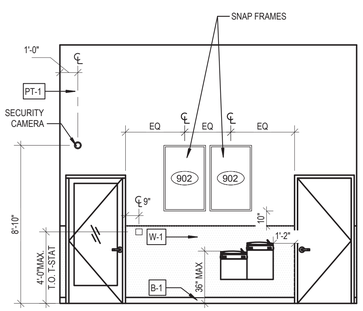

10 A-7.1 WAITING ROOM
Scale: 1/4" = 1'-0"

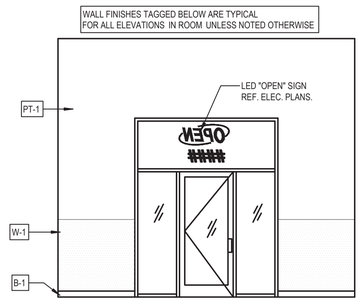

11 A-7.1 WAITING ROOM
Scale: 1/4" = 1'-0"

12 A-7.1 NOT USED

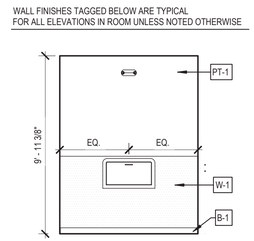

13 A-7.1 UNISEX TOILET
Scale: 1/4" = 1'-0"

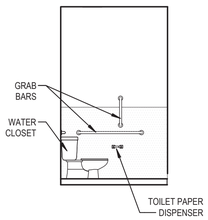

14 A-7.1 UNISEX TOILET
Scale: 1/4" = 1'-0"

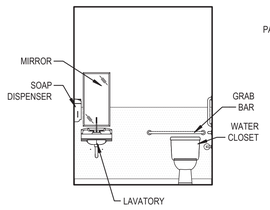

15 A-7.1 UNISEX TOILET
Scale: 1/4" = 1'-0"

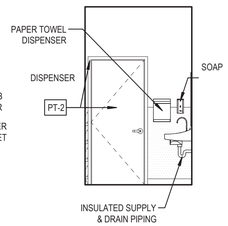

16 A-7.1 UNISEX TOILET
Scale: 1/4" = 1'-0"

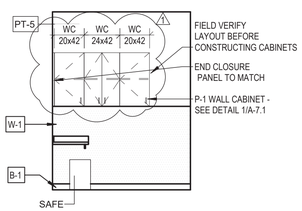

17 A-7.1 OFFICE
Scale: 1/4" = 1'-0"

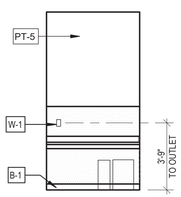

18 A-7.1 OFFICE
Scale: 1/4" = 1'-0"

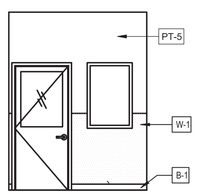

19 A-7.1 OFFICE
Scale: 1/4" = 1'-0"

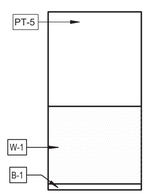

20 A-7.1 OFFICE
Scale: 1/4" = 1'-0"

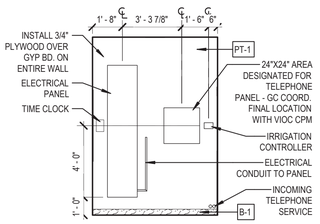

21 A-7.1 UTILITY ROOM
Scale: 1/4" = 1'-0"

STONE- HARDIE PANEL OPTION

BRAMIC DESIGN GROUP PLLC
8003 S. GALILEO LN.
TUCSON, AZ 85747
PHONE: (520) 401-9183

COPYRIGHT NOTICE
This drawing is the property of the above referenced Professional and is not to be used for any purpose other than the specific project and site names herein, and cannot be reproduced in any manner without the express written permission from the Professional.

DATE	ISSUE
05.17.24	ISSUED FOR PERMIT REVIEW SET

DATE	REVISION
07.08.24	C.O.T. COMMENTS

PROFESSIONAL SEAL
REGISTERED ARCHITECT CERTIFICATE NO. 15939 GENE GOLDSTEIN Date Signed 05.17.24 ARIZONA U.S.A. Expires 12.31.25

PROFESSIONAL LICENSE NO:
ARIZONA 15939
CERTIFICATE OF AUTHORIZATION NO:

PROFESSIONAL IN CHARGE
GENE GOLDSTEIN
PROJECT MANAGER
KYLE VILAUBI
QUALITY CONTROL
KYLE VILAUBI, GENE GOLDSTEIN
DRAWN BY
KYLE VILAUBI / JON WADE

PROJECT ADDRESS
2920 S. PARK AVE
TUCSON ARIZONA 85713

Valvoline Instant Oil Change
VALVOLINE INSTANT OIL CHANGE

BDG PROJECT NUMBER
23-849

SHEET NAME
DETAILS AND INTERIOR ELEVATIONS

SHEET #
A-7.1

BIM 360://VIOC Project/BE-HAA2 Arch.rvt
8/30/2023 17:27:42

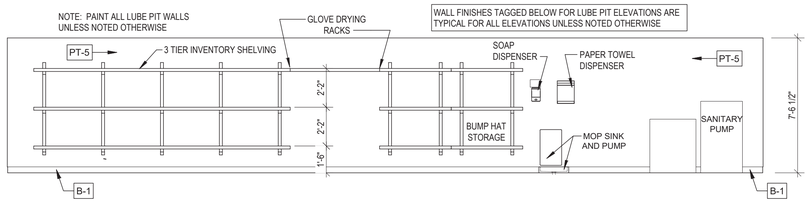

1 A-7.2 LUBE PIT
Scale: 1/4" = 1'-0"

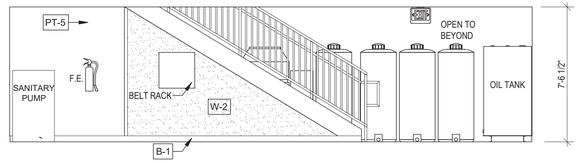

2 A-7.2 LUBE PIT
Scale: 1/4" = 1'-0"

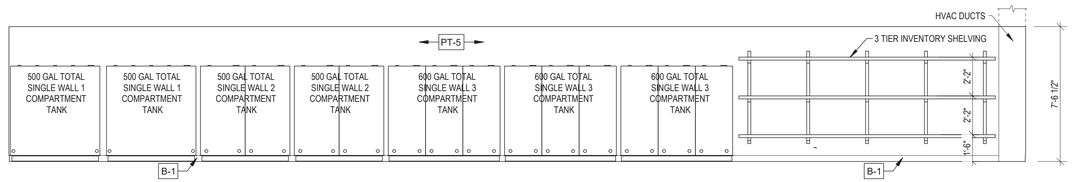

3 A-7.2 LUBE PIT
Scale: 1/4" = 1'-0"

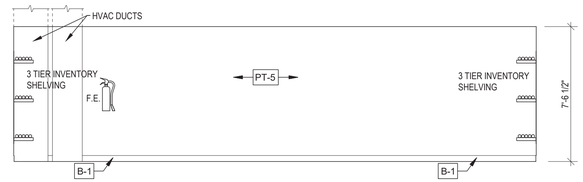

4 A-7.2 LUBE PIT
Scale: 1/4" = 1'-0"

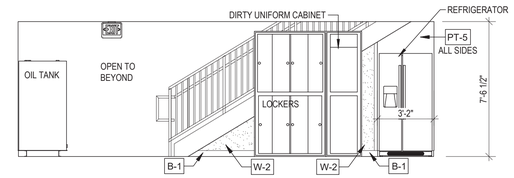

5 A-7.2 LOCKERS
Scale: 1/4" = 1'-0"

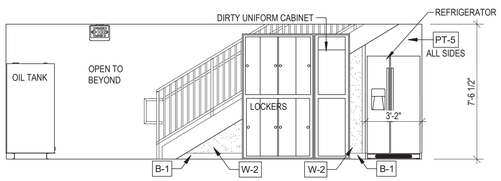

6 A-7.2 LOCKERS
Scale: 1/4" = 1'-0"

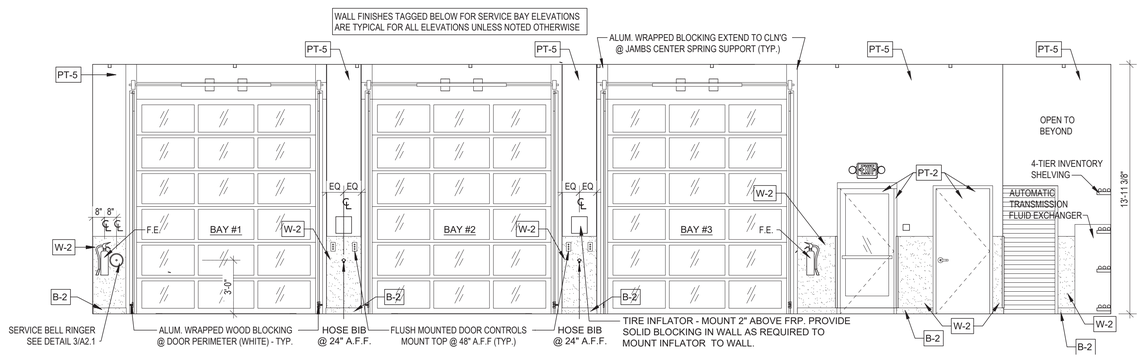

7 A-7.2 SERVICE BAYS
Scale: 1/4" = 1'-0"

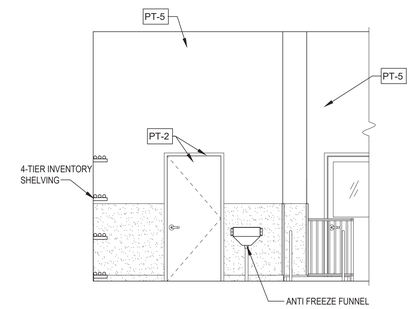

8 A-7.2 SERVICE BAYS
Scale: 1/4" = 1'-0"

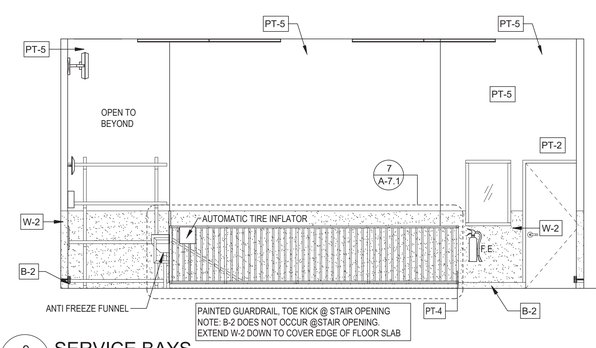

9 A-7.2 SERVICE BAYS
Scale: 1/4" = 1'-0"

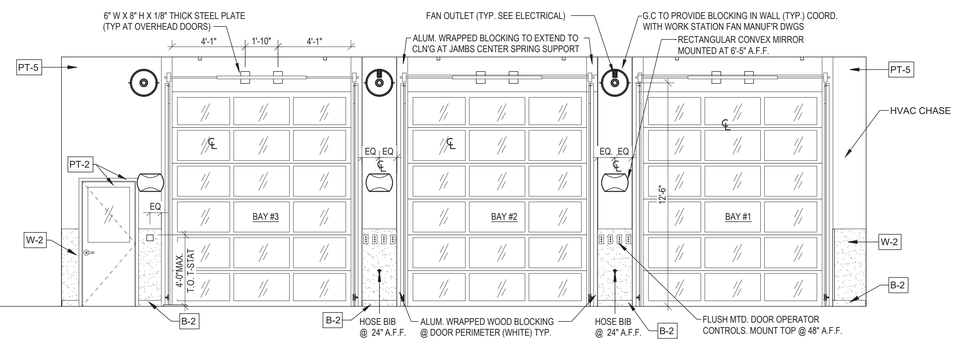

10 A-7.2 SERVICE BAYS
Scale: 1/4" = 1'-0"

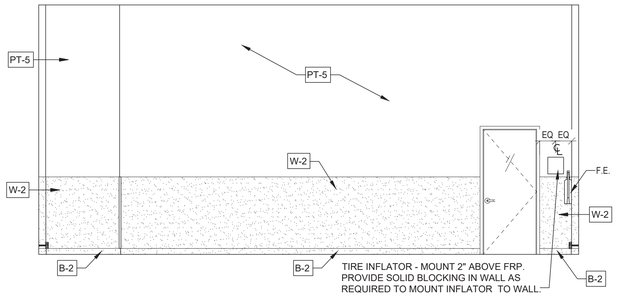

11 A-7.2 SERVICE BAYS
Scale: 1/4" = 1'-0"

STONE- HARDIE PANEL OPTION

BRAMIC DESIGN GROUP PLLC
8003 S. GALILEO LN.
TUCSON, AZ 85747
PHONE: (520) 401-9183

COPYRIGHT NOTICE
This drawing is the property of the above referenced Professional and is not to be used for any purpose other than the specific project and site names herein, and cannot be reproduced in any manner without the express written permission from the Professional.

DATE	ISSUE
05.17.24	ISSUED FOR PERMIT REVIEW SET

DATE	REVISION
07.08.24	C.O.T. COMMENTS

PROFESSIONAL SEAL
REGISTERED ARCHITECT CERTIFICATE NO. 15939 GENE GOLDSTEIN Signed 03.17.24 ARIZONA U.S.A. Expires 12.31.23

PROFESSIONAL LICENSE NO:
ARIZONA 15939
CERTIFICATE OF AUTHORIZATION NO:

PROFESSIONAL IN CHARGE
GENE GOLDSTEIN

PROJECT MANAGER
KYLE VILAUBI

QUALITY CONTROL
KYLE VILAUBI, GENE GOLDSTEIN

DRAWN BY
KYLE VILAUBI / JON WADE

PROJECT ADDRESS
2920 S. PARK AVE
TUCSON ARIZONA 85713

Valvoline Instant Oil Change

VALVOLINE INSTANT OIL CHANGE

BDG PROJECT NUMBER
23-849

SHEET NAME
INTERIOR ELEVATIONS

SHEET #
A-7.2

13-07-2023 17:27:49 BIM 360://VOIC Proto/08L1HA2 Arch.rvt

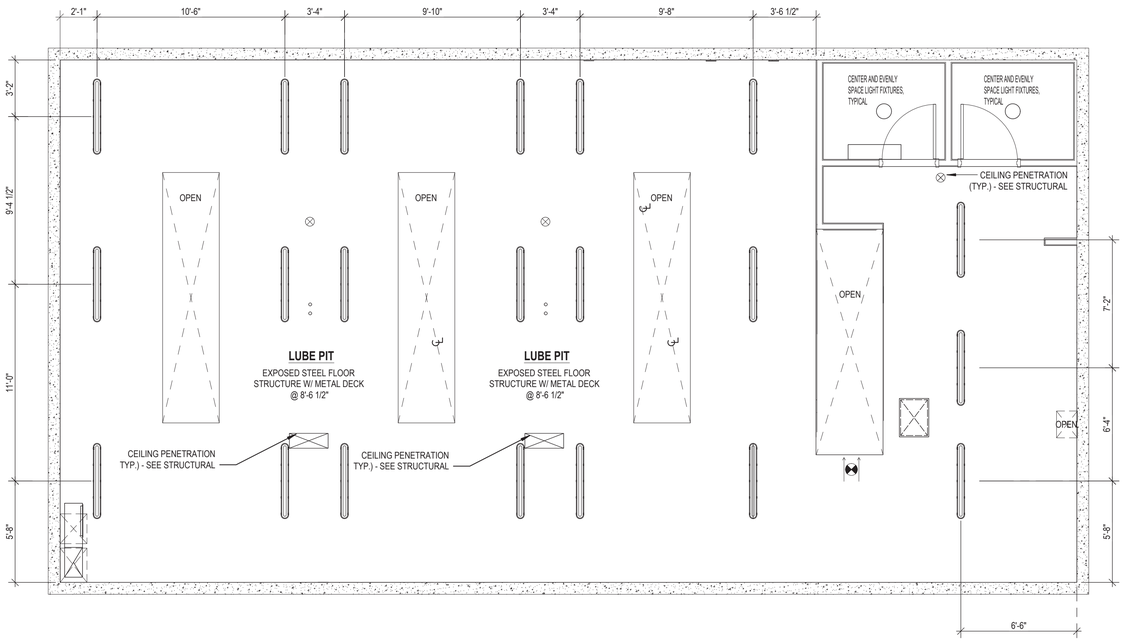

1 A-8.1 REFLECTED CEILING PLAN - LOWER LEVEL
Scale: 1/4" = 1'-0"

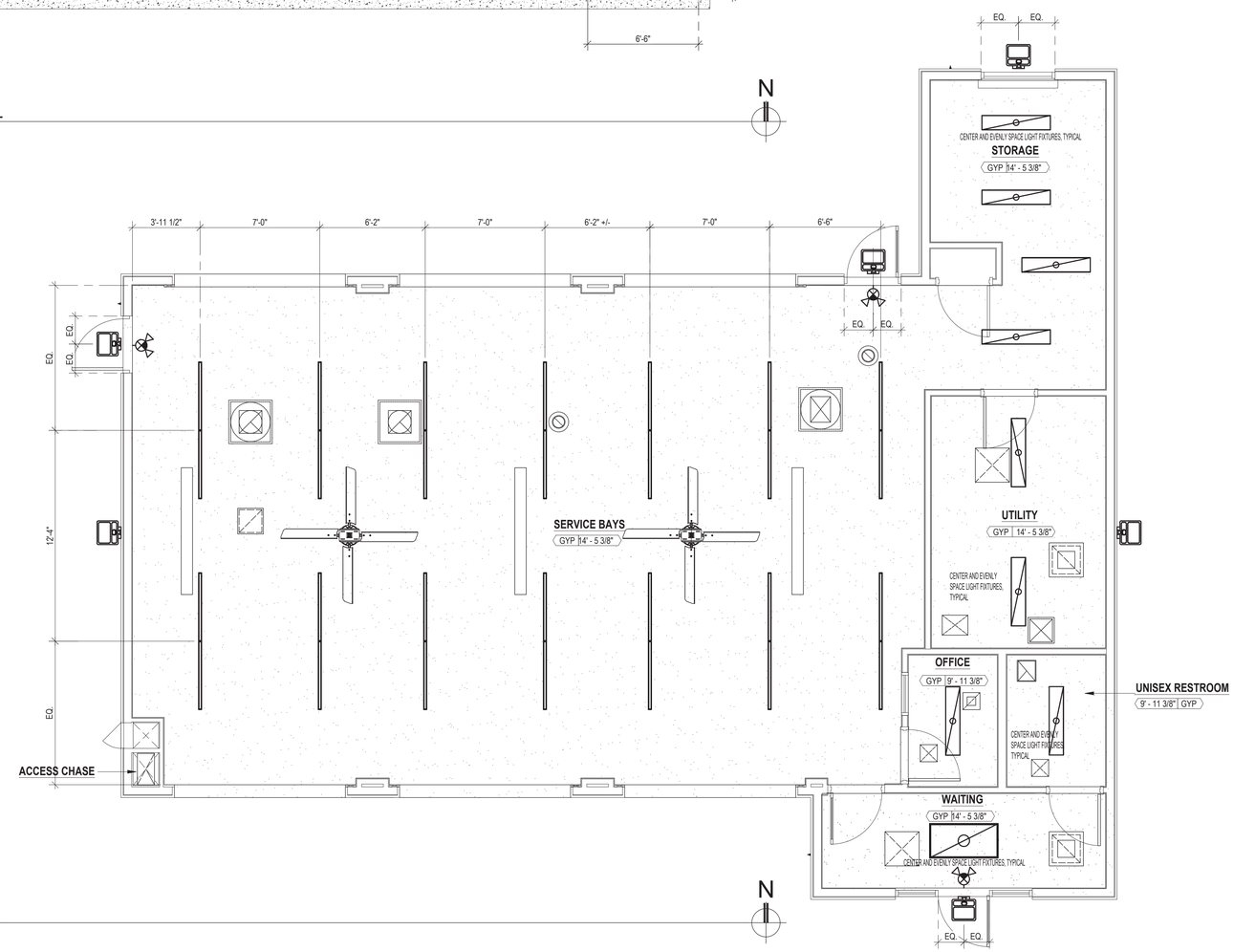

2 A-8.1 REFLECTED CEILING PLAN - UPPER LEVEL
Scale: 1/4" = 1'-0"

LEGEND

- SURFACE MOUNTED 2x4 LED LIGHT
- SURFACE MOUNTED 1x4 LED LIGHT
- SURFACE MOUNTED LED SERVICE BAY LIGHT - REFER TO ELECTRICAL DRAWINGS FOR WHICH LIGHTS ARE EMERGENCY LIGHTS
- SURFACE MOUNTED LED LIGHT (MOUNT TO UNDERSIDE OF STEEL DECK) - REFER TO ELECTRICAL DRAWINGS FOR WHICH LIGHTS ARE EMERGENCY LIGHTS
- LUBE PIT LED UPLIGHT
- DIFFUSER - SEE MECHANICAL PLAN FOR SIZE
- RETURN AIR GRILLE - SEE MECHANICAL PLAN FOR SIZE
- SURFACE MOUNTED DISC LIGHT
- DIRECTIONAL EXIT SIGN
- EXIT SIGN W/ DUAL HEAD EMERGENCY LIGHTS
- REMOTE EMERGENCY LIGHT
- FLOOR PENETRATION THRU SLAB ABOVE - COORDINATE ALL FLOOR SLAB PENETRATION SIZES AND LOCATIONS WITH STRUCTURAL, MECHANICAL AND PLUMBING PLANS.
- EXTERIOR WALL MOUNTED LED SITE LIGHT FIXTURE
- RADIANT HEATER, SEE MECHANICAL PLAN FOR SIZE
- CEILING FAN SEE MECANICAL PLAN FOR ADDITIONAL INFORMATION
- INTAKE AIR GRILLE, SEE MECANICAL PLAN FOR ADDITIONAL INFORMATION

NOTES

1. REFER TO SECURITY PLAN FOR CAMERA, MOTION DETECTOR AND DOOR CONTACT LOCATIONS
2. REFER TO ELECTRICAL & MECHANICAL DRAWINGS FOR SPECIFIC INFORMATION.
3. COORDINATE LOWER LEVEL LIGHTING LOCATIONS w/ CONCRETE DECK PENETRATION LOCATIONS. DO NOT INSTALL LIGHTING OR CONDUIT OVER PENETRATION LOCATIONS. VERIFY FIELD ADJUSTED MOUNTING LOCATIONS w/ VALVOLINE C.M. PRIOR TO INSTALLATION.

BRAMIC DESIGN GROUP PLLC
8003 S. GALILEO LN.
TUCSON, AZ 85747
PHONE: (520) 401-9183

COPYRIGHT NOTICE
This drawing is the property of the above referenced Professional and is not to be used for any purpose other than the specific project and site names herein, and cannot be reproduced in any manner without the express written permission from the Professional.

DATE	ISSUE
05.17.24	ISSUED FOR PERMIT REVIEW SET

DATE	REVISION
07.08.24	C.O.T. COMMENTS

PROFESSIONAL SEAL

REGISTERED ARCHITECT CERTIFICATE NO. 15939 GENE GOLDSTEIN ARIZONA U.S.A. Date 05.17.24 Expires 12.31.25

PROFESSIONAL LICENSE NO:
ARIZONA 15939
CERTIFICATE OF AUTHORIZATION NO:

PROFESSIONAL IN CHARGE
GENE GOLDSTEIN

PROJECT MANAGER
KYLE VILAUBI

QUALITY CONTROL
KYLE VILAUBI, GENE GOLDSTEIN

DRAWN BY
KYLE VILAUBI / JON WADE

PROJECT ADDRESS
2920 S. PARK AVE
TUCSON ARIZONA 85713

Valvoline Instant Oil Change

VALVOLINE INSTANT OIL CHANGE

BDG PROJECT NUMBER
23-849

SHEET NAME
REFLECTED CEILING PLANS

SHEET #
A-8.1

STONE- HARDIE PANEL OPTION

BIM 360://VOIC Prototype/BLHAZ Arch.rvt
5/07/2025 17:27:53

GENERAL NOTES

1. GRIND ALL WELDS FLUSH WITH SURFACE.
2. ALL STEEL SHALL BE GALVANIZED PRIOR TO INSTALLATION AND PAINTING. GAVANIZED STEEL SHALL COMPLY WITH ASTM A123, A143, AND A153.
3. CONCRETE FLOOR TOPPING THICKNESS SHALL BE MEASURED AT EXTERIOR MAN DOOR AND MAY ADJUST SLIGHTLY AT OTHER LOCATIONS TO ACCOMMODATE CAMBER IN FLOOR STRUCTURE. SEE STRUCTURAL.
4. TROLLY RAILS SHALL BE INSTALLED SUCH THAT MAXIMUM WIDTH DIMENSION VARIATION SHALL NOT EXCEED 1/4".

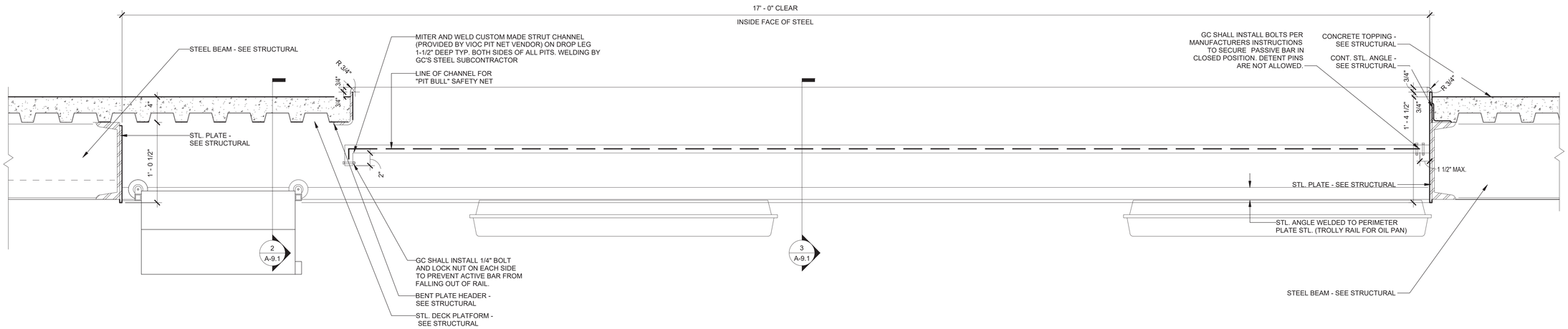

4 A-9.1 SECTION THRU FLOOR OPENING W/ LIFT
Scale: 1 1/2" = 1'-0"

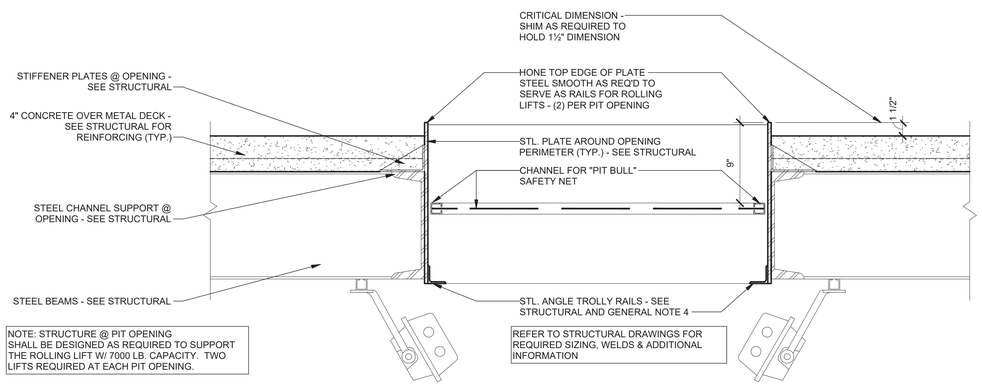

3 A-9.1 SECTION THRU PIT FLOOR OPENING
Scale: 1 1/2" = 1'-0"

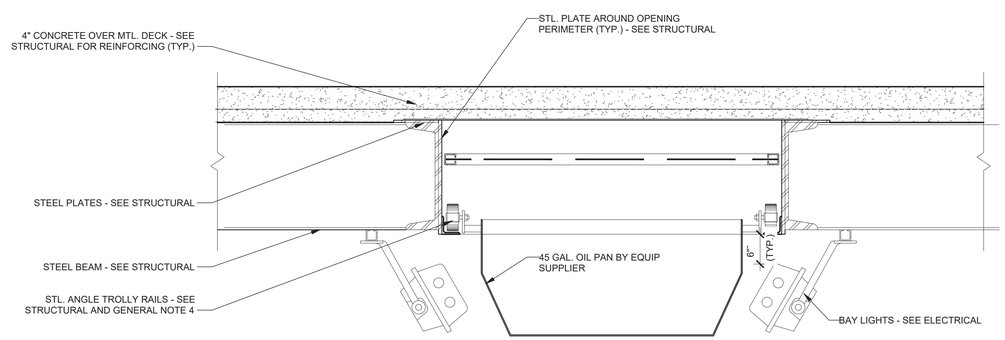

2 A-9.1 SECTION THRU PIT FLOOR OPENING
Scale: 1 1/2" = 1'-0"

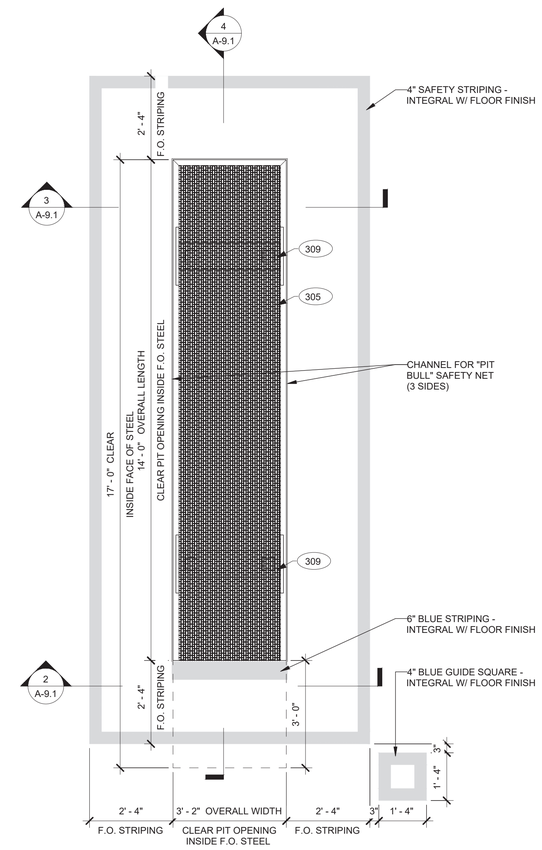

1 A-9.1 PLAN DETAIL @ PIT OPENING
Scale: 1/2" = 1'-0"

BRAMIC DESIGN GROUP PLLC
8003 S. GALILEO LN.
TUCSON, AZ 85747
PHONE: (520) 401-9183

COPYRIGHT NOTICE
This drawing is the property of the above referenced Professional and is not to be used for any purpose other than the specific project and site names herein, and cannot be reproduced in any manner without the express written permission from the Professional.

DATE	ISSUE
05.17.24	ISSUED FOR PERMIT REVIEW SET

	DATE	REVISION
1	07.08.24	C.O.T. COMMENTS

PROFESSIONAL SEAL

REGISTERED ARCHITECT CERTIFICATE NO. 15939 GENE GOLDSTEIN Date Signed 05.17.24 ARIZONA U.S.A. Expires 12.31.25

PROFESSIONAL LICENSE NO:
ARIZONA 15939
CERTIFICATE OF AUTHORIZATION NO:

PROFESSIONAL IN CHARGE
GENE GOLDSTEIN

PROJECT MANAGER
KYLE VILAUBI

QUALITY CONTROL
KYLE VILAUBI, GENE GOLDSTEIN

DRAWN BY
KYLE VILAUBI / JON WADE

PROJECT ADDRESS
2920 S. PARK AVE
TUCSON ARIZONA 85713

Valvoline Instant Oil Change

VALVOLINE INSTANT OIL CHANGE

BDG PROJECT NUMBER
23-849

SHEET NAME
PIT OPENING DETAILS

SHEET #
A-9.1

STONE- HARDIE PANEL OPTION

13-07-2023 17:27:54 BIM 360:/VIOC Project/BLI 142 Arch.rvt

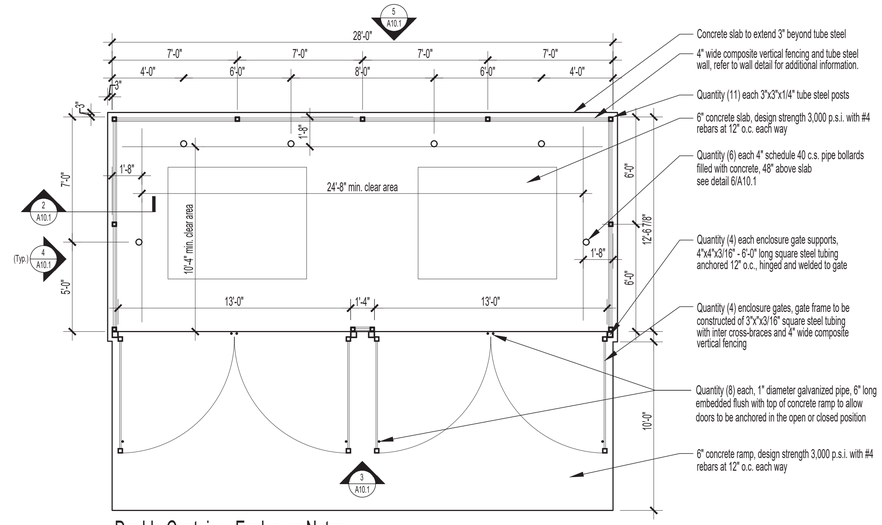

Double Container Enclosure Notes

1. Concrete ramp to be a minimum of 28'-0"x10'-0" and shall slope 2% away from enclosure.
2. Concrete slab for enclosure shall slope at 1% to gate opening.
3. The inside clear width and length shall not be less than 10'-0" for each container.
4. When necessary for personnel access, a 3'-0" wide doorway and steel door frame may be placed as required by the approved construction plan.
5. In front of enclosure and / or each container a 14'-0" by 40'-0" clear area shall be required and slope away from the enclosure 2%.
6. All residential establishments must comply with the city of Tucson development standards, chapter 15.
7. Provide welded steel cap for all tube steel columns

1 A-10.1 TRASH ENCLOSURE FLOOR PLAN
Scale: 1/4" = 1'-0"

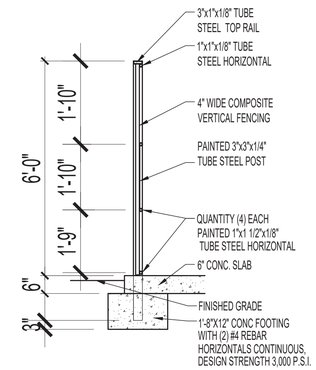

2 A-10.1 TRASH ENCLOSURE WALL
Scale: 1" = 1'-0"

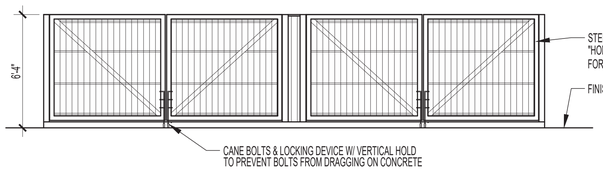

3 A-10.1 DUMPSTER ENCLOSURE FRONT ELEVATION
Scale: 1/2" = 1'-0"

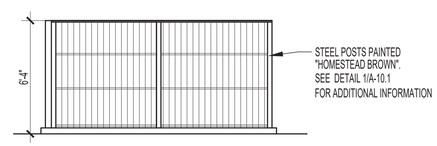

4 A-10.1 DUMPSTER ENCLOSURE SIDE ELEVATION
Scale: 1/2" = 1'-0"

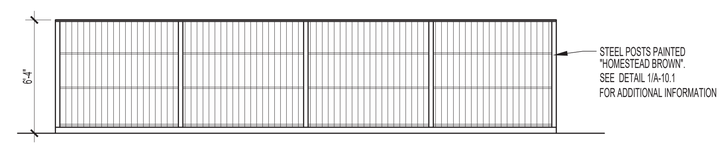

5 A-10.1 DUMPSTER ENCLOSURE REAR ELEVATION
Scale: 1/2" = 1'-0"

DUMPSTER EXTERIOR FINISH NOTES

REFER ALSO TO "EXTERIOR FINISHES", SHEET A-3.1 AND A-3.2

BOLLARDS / GUARD POSTS:
FIELD PAINT: PR-2 FOLLOWED BY TWO COATS OF PT-5

GATES & GATE POSTS:
FIELD PAINT: PR-2 FOLLOWED BY TWO COATS OF PT-2

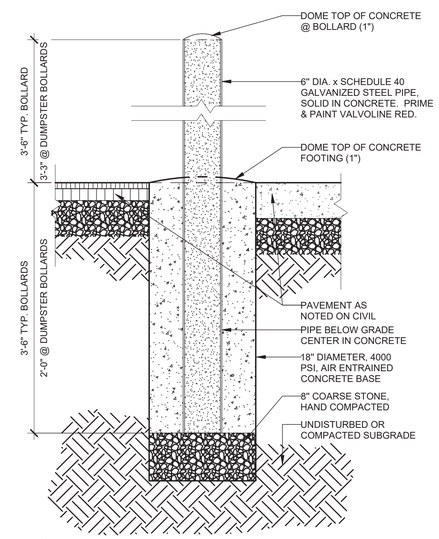

6 A-10.1 BOLLARD DETAIL
Scale: 1" = 1'-0"

STONE- HARDIE PANEL OPTION

BRAMIC DESIGN GROUP PLLC
8003 S. GALILEO LN.
TUCSON, AZ 85747
PHONE: (520) 401-9183

COPYRIGHT NOTICE
This drawing is the property of the above referenced Professional and is not to be used for any purpose other than the specific project and site names herein, and cannot be reproduced in any manner without the express written permission from the Professional.

DATE	ISSUE
05.17.24	ISSUED FOR PERMIT REVIEW SET

DATE	REVISION
07.08.24	C.O.T. COMMENTS

PROFESSIONAL SEAL

REGISTERED ARCHITECT CERTIFICATE NO. 15939 GENE GOLDSTEIN ARIZONA U.S.A. Date 05.17.24 Expires 12.31.25

PROFESSIONAL LICENSE NO:
ARIZONA 15939
CERTIFICATE OF AUTHORIZATION NO:

PROFESSIONAL IN CHARGE
GENE GOLDSTEIN

PROJECT MANAGER
KYLE VILAUBI

QUALITY CONTROL
KYLE VILAUBI, GENE GOLDSTEIN

DRAWN BY
KYLE VILAUBI / JON WADE

PROJECT ADDRESS
2920 S. PARK AVE
TUCSON ARIZONA 85713

VALVOLINE INSTANT OIL CHANGE

BDG PROJECT NUMBER
23-849

SHEET NAME
DUMPSTER ENCLOSURE

SHEET #
A-10.1

5/31/2023 17:27:57 BIM 360://VOIC Project/BLHAA2 Arch.rvt

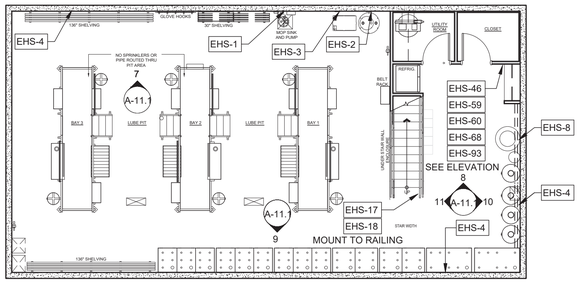

1 PLACARD PLACEMENT PLAN - LOWER LEVEL
Scale: 1/8" = 1'-0"

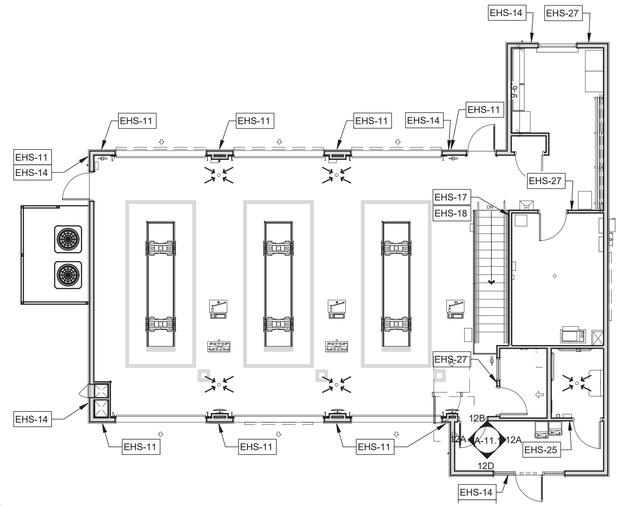

2 PLACARD PLACEMENT PLAN - UPPER LEVEL
Scale: 1/8" = 1'-0"

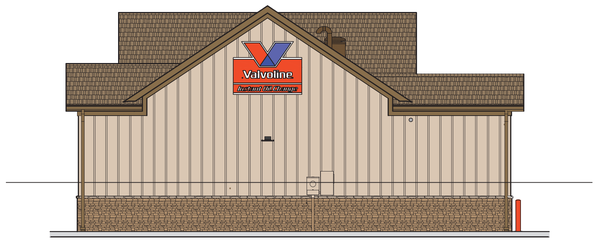

3 RIGHT - ELEVATION
Scale: 1/8" = 1'-0"

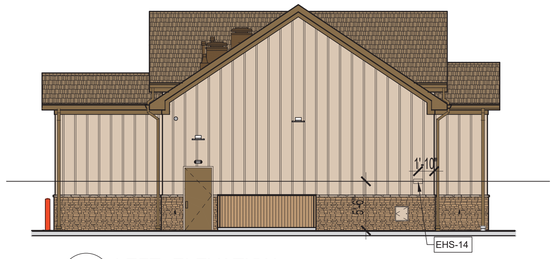

6 LEFT -ELEVATION
Scale: 1/8" = 1'-0"

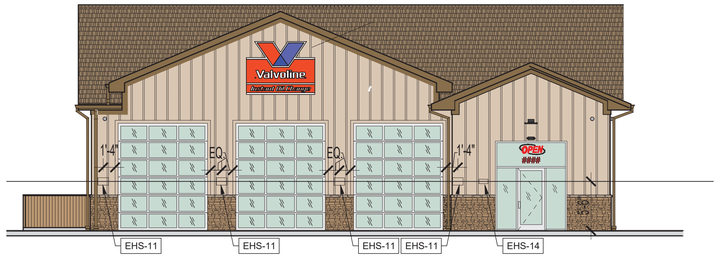

4 FRONT - ELEVATION
Scale: 1/8" = 1'-0"

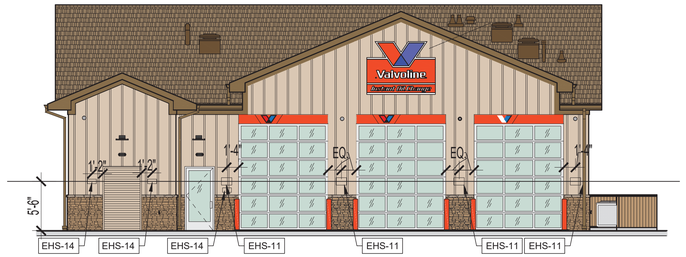

5 REAR - ELEVATION
Scale: 1/8" = 1'-0"

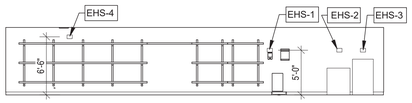

7 LUBE PIT / BREAK AREA
Scale: 1/8" = 1'-0"

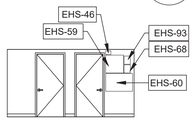

8 LOCKER AREA
Scale: 1/8" = 1'-0"

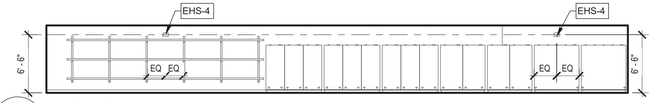

9 LUBE PIT
Scale: 1/8" = 1'-0"

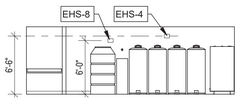

10 LOCKER AREA
Scale: 1/8" = 1'-0"

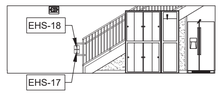

11 LOCKER AREA
Scale: 1/8" = 1'-0"

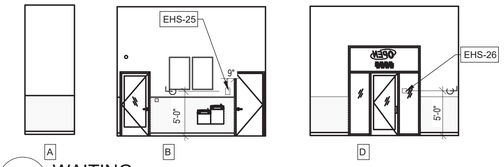

12 WAITING
Scale: 1/8" = 1'-0"

PLACARD PLACEMENT INFO FOR REFERENCE ONLY - COORDINATE ALL PLACARD PLACEMENT WITH VIOC CONSTRUCTION PROJECT MANAGER BEFORE INSTALLATION

SIGNAGE SCHEDULE

NUMBER	SIZE (HT. X WIDTH)	REMARKS
EHS-1	5" X 7"	GROUND WATER SUMP
EHS-2	5" X 7"	OIL/WATER SEPARATOR LIFT SUMP
EHS-3	5" X 7"	OIL/WATER SEPARATOR
EHS-4	5" X 7"	DANGER NO SMOKING, SPARKS, FLAME
EHS-8	5" X 7"	SPENT ANTIFREEZE FOR RECYCLING
EHS-11	10" X 14"	CAUTION OPEN FLOOR
EHS-14	6" X 12"	NO SMOKING FOR YOUR SAFETY
EHS-15	5" X 7"	DO NOT DOUBLE STACK BLOCKS
EHS-17	5" x 7"	PLEASE HOLD RAIL WHEN USING STAIRS
EHS-18	5" X 7"	PLEASE DO NOT LEAVE ITEMS ON STAIR LANDING
EHS-20	5" X 7"	OILY ABSORBENTS FOR ENERGY RECOVERY
EHS-25	9" X 6"	RESTROOM
EHS-26	6" X 6"	EXIT
EHS-27	3" X 6"	EMPLOYEES ONLY
EHS-30	9" X 6"	NOTICE THIS LOCATION MAKES AUDIO AND VIDEO RECORDINGS FOR SAFETY, SECURITY, AND QUALITY ASSURANCE PURPOSES
EHS-43	5" X 7"	ABANDONED USED OIL
EHS-46	5" X 7"	IT IS ILLEGAL TO REMOVE ANYTHING FROM THIS CONTAINER OR AREA WITHOUT WRITTEN AUTHORIZATION FROM ASHLAND INC.
EHS-47	3" X 5"	DRUG-FREE WORKPLACE IF YOU USE DRUGS PLEASE DON'T APPLY
EHS-59	24" X 24"	VIOC LIFTING DO'S AND DON'TS
EHS-60	24" X 36"	APPROVED INDUSTRIAL STRETCHES
EHS-68	11" X 8.5"	INJURY REPORTING PROCEDURES
EHS-69	24" X 24"	SIX-FINGER METHOD
EHS-74	10" X 7"	SNAILS ON STAIRS
EHS-93	10.75" X 10.75"	HAZARDOUS MATERIALS

STONE- HARDIE PANEL OPTION

BRAMIC DESIGN GROUP PLLC
8003 S. GALILEO LN.
TUCSON, AZ 85747
PHONE: (520) 401-9183

COPYRIGHT NOTICE
This drawing is the property of the above referenced Professional and is not to be used for any purpose other than the specific project and site names herein, and cannot be reproduced in any manner without the express written permission from the Professional.

DATE	ISSUE
05.17.24	ISSUED FOR PERMIT REVIEW SET

DATE	REVISION
07.08.24	C.O.T. COMMENTS

PROFESSIONAL SEAL

REGISTERED ARCHITECT
CERTIFICATE NO. 15939
GENE GOLDSTEIN
Signed 05.17.24
ARIZONA U.S.A.
Expires 12.31.25

PROFESSIONAL LICENSE NO:
ARIZONA 15939
CERTIFICATE OF AUTHORIZATION NO:

PROFESSIONAL IN CHARGE
GENE GOLDSTEIN

PROJECT MANAGER
KYLE VILAUBI

QUALITY CONTROL
KYLE VILAUBI, GENE GOLDSTEIN

DRAWN BY
KYLE VILAUBI / JON WADE

PROJECT ADDRESS
2920 S. PARK AVE
TUCSON ARIZONA 85713

VALVOLINE INSTANT OIL CHANGE

BDG PROJECT NUMBER
23-849

SHEET NAME
PLACARD PLACEMENT INFO

SHEET #
A-11.1

13-07-2023 17:28:18 BIM 360/VIOC Proto/26LH-AZ Arch.rvt

GENERAL STRUCTURAL NOTES

A. DESIGN CRITERIA:

1. DESIGN CODE: 2018 INTERNATIONAL BUILDING CODE, WITH LOCAL AMENDMENTS.
2. RISK CATEGORY: II
3. ROOF TRUSSES/JOISTS DEAD LOAD: 25 PSF
4. FLOOR TRUSSES/JOISTS DEAD LOAD: 65 PSF
5. ROOF LIVE LOAD: 20 PSF (REDUCIBLE)
6. FLOOR LIVE LOAD: 100 PSF (REDUCIBLE/NON-REDUCIBLE)
7. RAIN INTENSITY, i: 3 IN/HR
8. WIND DESIGN:
   BASIC DESIGN WIND SPEED, V: 105 MPH
   ALLOWABLE STRESS DESIGN WIND SPEED, V_{asd}: 83 MPH
   WIND EXPOSURE: C
   INTERNAL PRESSURE COEFFICIENT (GC_{Pi}): +- 0.18
   COMPONENTS & CLADDING:
   GABLE ROOF:
   ZONE 1,2e: +16.00/-27.90 PSF
   ZONE 2n,2r: +16.00/-35.72 PSF
   ZONE 3r: +16.00/-44.88 PSF
   WALLS:
   ZONE 4: +23.73/-25.89 PSF
   ZONE 5: +23.73/-29.67 PSF
9. SEISMIC DESIGN:
   SEISMIC IMPORTANCE FACTOR, I_e: 1.0
   S_s: 0.269, S_1: 0.083
   SITE CLASS: D
   S_{DS}: 0.284, S_{D1}: 0.133
   SEISMIC DESIGN CATEGORY: B
   SFRS: LIGHT-FRAME WALLS SHEATHED WITH WSP AND ORDINARY REINFORCED CONCRETE SHEAR WALLS
   BASE SHEAR: 0.0437 x W KIPS FOR WOOD WALL
   0.0711 x W KIPS FOR CONCRETE WALL
   RESPONSE COEFFICIENT, C_s: 0.0437 FOR WOOD WALL & 0.0711 FOR CONCRETE WALL

   SFRS: 6.5 FOR WOOD WALL & 4 FOR CONCRETE WALL
   EQUIVALENT LATERAL FORCE PROCEDURE

WIND AND SEISMIC LOADS ARE ULTIMATE/STRENGTH DESIGN LIMIT STATES PER ASCE 7-16, U.N.O.

B. GENERAL:

1. THE CONTRACT STRUCTURAL DRAWINGS AND SPECIFICATIONS REPRESENT THE FINISHED STRUCTURE. THEY DO NOT INDICATE THE METHOD OR SEQUENCE OF CONSTRUCTION. THE CONTRACTOR SHALL BE RESPONSIBLE FOR AND PROVIDE ALL MEASURES NECESSARY TO PROTECT THE STRUCTURE DURING CONSTRUCTION. THESE MEASURES SHALL INCLUDE, BUT NOT BE LIMITED TO: BRACING, SHORING OF LOADS DUE TO CONSTRUCTION EQUIPMENT, ETC. THE CONTRACTOR SHALL BE RESPONSIBLE FOR THE DESIGN AND IMPLEMENTATION OF ALL SCAFFOLDING, BRACING AND SHORING. OBSERVATION VISITS TO THE SITE BY THE STRUCTURAL ENGINEER SHALL NOT INCLUDE INSPECTION OF THE ABOVE ITEMS. THE STRUCTURAL ENGINEER WILL NOT BE RESPONSIBLE FOR THE CONTRACTOR'S MEANS, METHODS, TECHNIQUES, SEQUENCES OR PROCEDURES OF CONSTRUCTION, NOR WILL THE STRUCTURAL ENGINEER BE RESPONSIBLE FOR CONSTRUCTION SITE SAFETY, OR THE SAFETY PRECAUTIONS AND THE PROGRAMS INCIDENT THERETO.
2. CONTRACTOR SHALL VERIFY ALL DIMENSIONS AND COORDINATE SITE CONDITIONS WITH THE DRAWINGS PRIOR TO CONSTRUCTION. ANY DISCREPANCIES AND OMISSIONS SHALL BE RESOLVED WITH THE ARCHITECT. DO NOT USE SCALED DIMENSIONS.
3. CONSTRUCTION MATERIALS SHALL BE SPREAD OUT IF PLACED ON FRAMED FLOORS OR ROOFS SO AS NOT TO EXCEED THE DESIGN LIVE LOAD PER SQUARE FOOT.
4. WHERE REFERENCE IS MADE TO VARIOUS TEST STANDARDS FOR MATERIALS, SUCH STANDARDS SHALL BE THE LATEST EDITION AND/OR ADDENDA.
5. WHERE ANY DISCREPANCIES OCCUR BETWEEN PLANS, DETAILS, GENERAL STRUCTURAL NOTES AND SPECIFICATIONS, THE GREATER REQUIREMENTS SHALL GOVERN. WHERE NO SPECIFIC DETAIL IS SHOWN, CONSTRUCTION SHALL CONFORM TO SIMILAR WORK ON THE PROJECT. FOR BIDDING PURPOSES, WHERE ANY MEMBER OR STRUCTURAL ELEMENT IS SHOWN BUT NOT CALLED OUT ON THE PLANS OR DETAILS, THE LARGEST SIMILAR MEMBER OR ELEMENT USED IN THE PROJECT SHALL BE UTILIZED.
6. REFER TO ARCHITECTURAL, MECHANICAL, PLUMBING, ELECTRICAL AND CIVIL DRAWINGS FOR LOCATION AND DETAILS OF BLOCKOUTS, INSERTS AND OPENINGS, CURBS, EQUIPMENT BASES AND PADS, SITE WORK ITEMS, ETC. AND DIMENSIONS NOT SHOWN ON THE STRUCTURAL DRAWINGS.
7. APPROVED EQUAL OPTIONS ARE FOR THE CONTRACTOR'S CONVENIENCE. IF AN OPTION IS CHOSEN, THE CONTRACTOR SHALL BE RESPONSIBLE FOR ALL CHANGES NECESSARY AND COORDINATION OF ALL DETAILS.
8. ALL DETAILS SHOWN SHALL BE INCORPORATED INTO THE PROJECT AT ALL APPROPRIATE LOCATIONS, WHETHER SPECIFICALLY INDICATED OR NOT. TYPICAL DETAILS MAY OR MAY NOT BE FLAGGED ON THE DRAWINGS BUT SHALL APPLY UNLESS NOTED OTHERWISE.
9. ANY ENGINEERING DESIGN PROVIDED BY OTHERS AND SUBMITTED FOR REVIEW SHALL BEAR THE SEAL OF A CIVIL OR STRUCTURAL ENGINEER REGISTERED IN THE STATE THE PROJECT IS LOCATED IN.

C. INSTRUCTIONS TO BIDDERS AND CONTINGENCIES:

1. UNDER NO CIRCUMSTANCES SHALL THESE DRAWINGS BE "FINAL BID" UNTIL THE PROJECT IS FULLY PERMITTED.
2. ALL PRELIMINARY PRICING EFFORTS SHALL BE CONSIDERED TO BE ESTIMATES ONLY AND SHALL INCLUDE THE NECESSARY CONTINGENCIES, ALLOWANCES, ALTERNATES, ETC. AS APPROPRIATE TO ACCOUNT FOR MODIFICATIONS AND ADDITIONS THAT WILL OCCUR TO THE DRAWINGS DURING THE FINALIZATION OF THE DESIGN AND PERMITTING.
3. THE GENERAL CONTRACTOR SHALL UTILIZE THE FOLLOWING MINIMUM CONTINGENCIES FOR EACH OF THE STRUCTURAL ELEMENT COSTS TO BE USED AT THE SOLE DISCRETION OF THE STRUCTURAL ENGINEER:
   a. CONSTRUCTION DOCUMENTS/FINAL BID - 3% MINIMUM
4. THE CONTINGENCY FOR EACH STRUCTURAL ELEMENT COST SHALL BE CLEARLY SHOWN AS A LINE ITEM IN THE GENERAL CONTRACTOR'S FINAL BID AND/OR COST ESTIMATE. ALL OF THE "FINAL BID" CONTINGENCIES NOT USED BY THE STRUCTURAL ENGINEER SHALL BE REFUNDED TO THE OWNER PRIOR TO CLOSEOUT OF THE PROJECT.
5. ANY MODIFICATIONS, DELETIONS OR ELIMINATIONS TO THE STRUCTURAL BIDDING AND CONTINGENCY REQUIREMENTS, WITHOUT THE CONSENT OF THE STRUCTURAL ENGINEER, SHALL AUTOMATICALLY INDEMNIFY THE STRUCTURAL ENGINEER OF ANY COSTS THAT MAY ARISE DURING THE DESIGN AND CONSTRUCTION OF THE PROJECT.
6. WHERE DISCREPANCIES OCCUR WITHIN THE DRAWINGS, THE CONTRACTOR WILL EITHER RESOLVE THE DISCREPANCIES WITH THE ARCHITECT BEFORE BIDDING OR INCLUDE THE GREATER COST ITEM IN THE BID AND RESOLVE THE DISCREPANCY PRIOR TO CONSTRUCTION.

D. LIMITATION OF LIABILITY:

1. THE STRUCTURAL ENGINEER IS NOT LIABLE FOR ANY ASPECTS OF THE STRUCTURE WHICH ARE NOT SPECIFICALLY SHOWN ON THE STRUCTURAL DOCUMENTS. IN THE EVENT A BUILDING ELEMENT IS NOT SHOWN ON THE STRUCTURAL DRAWINGS, THE CONTRACTOR SHALL BE RESPONSIBLE TO INFORM THE ENGINEER SO THAT THE ENGINEER CAN PROVIDE THE DESIGN.
2. ALL IMPOSED LOADS, WHICH EXCEED THE FOLLOWING LIMITATIONS, ARE NOT ALLOWED WITHOUT SPECIFIC APPROVAL FROM THE STRUCTURAL ENGINEER UNLESS SUCH LOADS ARE SPECIFICALLY SHOWN ON THE STRUCTURAL DOCUMENTS. SUCH LOADS INCLUDE, BUT ARE NOT LIMITED TO: LIGHTS, SOFFITS, PARTITIONS, MECHANICAL EQUIPMENT, PROCESS PIPING, MECHANICAL PIPING, ELECTRICAL EQUIPMENT, CEILING FEATURES, ETC. THE FOLLOWING ARE MAXIMUM IMPOSED CONCENTRATED LOADS THAT CAN BE APPLIED TO THE INDIVIDUAL MEMBERS SHOWN WITHOUT APPROVAL FROM THE ENGINEER. NOTE THAT NO MORE THAN ONE CONCENTRATED LOAD MAY BE APPLIED TO EACH MEMBER. MAXIMUM IMPOSED LOADS INCLUDE LOADS APPLIED TO SUPPORTED MEMBERS.

MAXIMUM IMPOSED LOADS TO STRUCTURAL FRAMING MEMBERS

50 LBS. MAXIMUM:
PREFABRICATED WOOD TRUSSES

100 LBS MAXIMUM:
CONVENTIONAL WOOD BEAMS

300 LBS MAXIMUM:
GLULAM AND LVL WOOD BEAMS
STEEL BEAM

E. FOUNDATIONS:

1. NO SOILS REPORT PROVIDED. FOUNDATION DESIGN IS BASED UPON A PRESUMPTIVE ALLOWABLE SOIL BEARING PRESSURE OF 1,500 PSF PER IBC TABLE 1806.2. FOUNDATIONS SHALL BEAR ON FIRM, UNDISTURBED NATIVE SOIL AT 2'-0" MINIMUM BELOW LOWEST ADJACENT FINISHED GRADE. FINISHED GRADE IS DEFINED AS TOP OF SLAB FOR INTERIOR FOUNDATIONS AND LOWEST FINISHED GRADE WITHIN 5'-0" FOR EXTERIOR FOUNDATIONS. THE BUILDING OFFICIAL SHALL INSPECT THE FOUNDATIONS PRIOR TO PLACEMENT OF CONCRETE PER IBC SECTION 110.3. A GEOTECHNICAL INVESTIGATION OF THE SITE SOIL CONDITIONS IS RECOMMENDED. IF THE BUILDING OFFICIAL HAS REASON TO DOUBT THE VALIDITY OF THE PRESUMPTIVE SOIL BEARING PRESSURE, A GEOTECHNICAL INVESTIGATION MAY BE REQUIRED. THE STRUCTURAL ENGINEER SHALL NOT BE RESPONSIBLE FOR ANY GEOTECHNICAL ASPECTS OF THIS PROJECT.

F. CONCRETE:

1. CONCRETE WORK SHALL CONFORM TO ALL REQUIREMENTS OF ACI 301 AND ACI 318.
2. CEMENT SHALL CONFORM TO ASTM C150, TYPE II. AGGREGATE PER ASTM C33. MIX DESIGNS SHALL BE DESIGNED BY THE CONCRETE PRODUCTION FACILITY IN ACCORDANCE WITH ACI 301 AND REVIEWED BY THE STRUCTURAL ENGINEER PRIOR TO CONSTRUCTION
3. CONCRETE SHALL BE READY MIXED CONCRETE IN ACCORDANCE WITH ASTM C94. MINIMUM 28 DAY COMPRESSIVE STRENGTH SHALL BE AS FOLLOWS:
   - STEM WALLS AND RETAINING WALLS: 3,000 PSI
   - SLABS ON GRADE: 3,000 PSI
   - CONCRETE WALL: 3,000 PSI
   - FOUNDATIONS: 3,000 PSI

   *DESIGNED FOR 2,500 PSI
4. CONCRETE SHALL BE FREE OF CHLORIDE. FLY ASH MAY NOT BE USED IN CONCRETE USED IN FLATWORK OR ARCHITECTURALLY EXPOSED CONCRETE. FLY ASH MAY BE SUBSTITUTED AT A 1.2:1 RATIO BY WEIGHT OF FLY ASH TO CEMENTITIOUS MATERIAL IN ALL OTHER CONCRETE. FLY ASH SHALL CONFORM TO ASTM C618, CLASS F AND SHALL BE LIMITED TO 30% OF CEMENT BY WEIGHT.
5. MAXIMUM SLUMP 4 1/2" FOR CONCRETE WITHOUT PLASTICIZER. IF PLASTICIZER IS USED, AN 8" MAXIMUM SLUMP IS ALLOWED AT PLACEMENT.
6. PROVIDE SLEEVES FOR UTILITY OPENINGS IN CONCRETE BEFORE PLACING CONCRETE. DO NOT CUT ANY CONFLICTING REINFORCING.
7. NO CONSTRUCTION JOINTS OTHER THAN THOSE SHOWN ON THE DRAWINGS SHALL BE INSTALLED WITHOUT APPROVAL OF THE ENGINEER.
8. MECHANICALLY VIBRATE ALL CONCRETE WHEN PLACED, EXCEPT THAT SLABS ON GRADE NEED BE VIBRATED ONLY AROUND UNDERFLOOR DUCTS, ETC ALL CONCRETE SLABS ON GRADE SHALL BE BOUNDED BY CONTROL JOINTS, KEYED OF SAW CUT, AS SHOWN ON THE FOUNDATION PLAN. UNLESS APPROVED OTHERWISE IN WRITING BY THE ARCHITECT, ALL CONCRETE SLABS ON GRADE SHALL BE BOUNDED BY CONTROL JOINTS, KEYED OR SAW CUT, SUCH THAT THE ENCLOSED AREA DOES NOT EXCEED 150 SQUARE FEET. CONTROL JOINTS SHALL NOT BE SPACED MORE THAN 15' O.C. AND SHALL NOT EXCEED A LENGTH TO WIDTH RATIO OF 1.5:1 UNLESS APPROVED IN WRITING BY THE ARCHITECT. KEYED CONSTRUCTION JOINTS NEED ONLY OCCUR AT EXPOSED EDGES DURING PLACEMENT. ALL OTHER JOINTS MAY BE SAW CUT.
9. CONCRETE SHALL NOT BE DROPPED MORE THAN FIVE FEET VERTICALLY WITHOUT USE OF TREMIES.
10. CONCRETE FOOTINGS AND PADS MAY BE POURED AGAINST NEAT EXCAVATIONS PROVIDED THE REQUIRED CONCRETE COVERAGE FOR REINFORCING IS MAINTAINED.
11. CONCRETE WHICH HAS CONTAINED WATER FOR MORE THAN 90 MINUTES, 60 MINUTES IF AIR TEMPERATURE EXCEEDS 85 DEGREES, SHALL NOT BE USED. RETEMPERING OF CONCRETE AFTER INITIAL SET HAS OCCURRED IS NOT PERMITTED.
12. CURE EXPOSED CONCRETE FOR A MINIMUM OF 9 DAYS IN ACCORDANCE WITH ACI 301 PROCEDURES IN ORDER TO PREVENT CRACKING. CURE WITH CURING AND SEALING COMPOUND, MOIST CURING, MOISTURE RETAINING COVER CURING OR COMBINATIONS THEREOF.
13. CONCRETE COMPRESSIVE STRENGTH AND SLUMP SHALL BE TESTED PER ASTM C31 AND C39. PROVIDE A MINIMUM OF 3 CYLINDERS PER TEST FOR EACH DAY'S CONCRETE PLACEMENT OR AS DIRECTED BY THE ARCHITECT. TEST ONE CYLINDER AT 8 DAYS AND TWO AT 28 DAYS. TESTING SHALL BE DONE BY A QUALIFIED TESTING LABORATORY.
14. VAPOR BARRIER PER ARCHITECTURAL DRAWINGS, WHERE REQUIRED THE INTERIOR SLAB ON GRADE IS CAST DIRECTLY ONTO A VAPOR BARRIER - SEE ARCHITECTURAL DRAWINGS FOR ADDITIONAL INFORMATION REGARDING VAPOR BARRIER. VAPOR BARRIER PLACEMENT SHALL BE PER THE LATEST EDITION OF ACI 360. SLAB CONSTRUCTION SHALL BE IN ACCORDANCE WITH THE LATEST EDITIONS OF ACI 302.1 AND ACI 318. ADVERSE EFFECTS OF VAPOR BARRIERS MAY INCLUDE INCREASED CRACKING, INCREASED CURLING AND INCREASED FINISHING TIME. USE OF VAPOR BARRIERS MAY ALSO LEAD TO REDUCED STRENGTH 0F IN-SITU CONCRETE. THE CONTRACTOR SHALL USE THEIR EXPERIENCE TO

    APPLY AND EMPLOY MEASURES WHEN INSTALLING THE CONCRETE TO MITIGATE THESE UNDESIRABLE EFFECTS. THE CONTRACTOR SHALL CONSIDER THE FOLLOWING IN THEIR CONCRETE PLACEMENT PLANS:
    - USE OF CONCRETE MIXES WHICH USE THE LARGEST SIZE AGGREGATE POSSIBLE AND EVENLY DISTRIBUTED AGGREGATE MIXES WITH LIMITED GAP GRADING.
    - USE OF SHRINKAGE REDUCING ADMIXTURES.
    - USE OF MACRO FIBER ADMIXTURES WHICH REDUCE CURLING.
    - CUTTING SLAB JOINTS WITHIN 12 HOURS USING AN EARLY ENTRY SAW.
    - USING THE MAXIMUM AMOUNT OF FLYASH ALLOWABLE TO REDUCE CEMENT.
    - REDUCE WATER CEMENT RATIOS WHILE USING WATER-REDUCING ADMIXTURES THAT DON'T INCREASE SHRINKAGE.
    - AGGRESSIVE CURING MEASURES THAT RETARD THE EVAPORATION OF WATER FROM THE SURFACE OF THE CONCRETE.

G. REINFORCING STEEL:

1. REINFORCING STEEL SHALL CONFORM TO ASTM A615, GRADE 60 (Fy = 60 KSI) DEFORMED BARS FOR ALL BARS #4 AND LARGER. ASTM A615, GRADE 40 (Fy = 40 KSI) DEFORMED BARS FOR ALL #3 BARS. REINFORCING TO BE WELDED SHALL CONFORM TO ASTM A706, GRADE 60 (Fy = 60 KSI) LOW ALLOY DEFORMED BARS. WELDED WIRE FABRIC PER ASTM A185; WIRE PER ASTM A82; PROVIDE IN FLAT SHEETS. WELDING OF REINFORCING SHALL BE IN ACCORDANCE WITH AWS D1.4. NO TACK WELDING OF REINFORCING BARS IS ALLOWED.
2. ALL REINFORCING SHALL BE DETAILED AND PLACED IN ACCORDANCE WITH THE LATEST EDITIONS OF ACI 318 AND THE CRSI "MANUAL OF STANDARD PRACTICE FOR REINFORCED CONCRETE CONSTRUCTION", AND AS MODIFIED BY THE DRAWINGS. ALL REINFORCING BAR BENDS SHALL BE MADE COLD.
3. ALL REINFORCING STEEL, INCLUDING WELDED WIRE FABRIC, SHALL BE ACCURATELY PLACED AND SUPPORTED BY GALVANIZED METAL CHAIRS, SPACES, HANGERS, SUPPORT BARS OR CONCRETE BLOCKS. REINFORCING SHALL NOT BE SUPPORTED BY STAKES DRIVEN INTO THE GROUND. PROVIDE THE FOLLOWING MINIMUM CLEAR CONCRETE COVERAGE:
   - CAST AGAINST AND PERMANENTLY EXPOSED TO EARTH: 3"
   - #6 AND LARGER EXPOSED TO EARTH OR WEATHER: 2"
   - #5 AND SMALLER EXPOSED TO EARTH OR WEATHER: 1 1/2"
   - FLAT SLAB: 3/4"

   ALL OTHERS PER LATEST EDITION OF ACI 318
4. UNLESS NOTED OTHERWISE, LAP SPLICES SHALL BE CLASS "B" TENSION LAP SPLICES PER LATEST EDITION OF ACI 318. STAGGER SPLICES A MINIMUM OF ONE LAP LENGTH. LAPS IN WELDED WIRE FABRIC SHALL BE MADE SUCH THAT THE OVERLAP BETWEEN THE OUTER MOST CROSS WIRES OF EACH SHEET IS NOT LESS THAN THE SPACING OF CROSS WIRES PLUS 2 INCHES.
5. ALL SPLICES LOCATIONS SUBJECT TO THE APPROVAL OF THE STRUCTURAL ENGINEER.
6. ALL REINFORCING NOTED AS CONTINUOUS SHALL BE FULLY CONTINUOUS AND SPLICED. SPLICED BARS SHALL BE PLACED AT THE SAME EFFECTIVE DEPTH, U.N.O.
7. REINFORCING BAR SPACINGS GIVEN ARE MAXIMUM ON CENTERS. DOWEL ALL VERTICAL REINFORCING TO FOUNDATION. SKEW HOOKS AS REQUIRED FOR CONCRETE COVER. SECURELY TIE ALL BARS IN POSITION BEFORE PLACING CONCRETE.
8. PROVIDE BENT CORNER BARS TO MATCH AND LAP WITH HORIZONTAL BARS AT ALL CORNERS AND INTERSECTIONS PER TYPICAL DETAILS.
9. REINFORCING BAR HOOKS SHALL BE STANDARD ACI HOOKS UNLESS NOTED OTHERWISE.

H. STRUCTURAL STEEL

1. ALL STEEL CONSTRUCTION SHALL CONFORM TO THE LATEST AISC "STEEL CONSTRUCTION MANUAL" AND AWS D1.1.
2. STRUCTURAL SHAPES, PLATES AND BOLTS SHALL BE AS FOLLOWS:
   - W SECTIONS: ASTM A992, Fy = 50 KSI
   - HSS SQUARE AND RECTANGULAR SHAPES: ASTM A500, GRADE B, Fy = 46 KSI
   - ALL OTHER SHAPES AND PLATES: ASTM A36, Fy = 36 KSI
   - BOLTS IN STEEL CONNECTIONS: ASTM A325N
   - BOLTS IN WOOD CONNECTIONS: ASTM A307, GRADE A
   - ANCHOR BOLTS: ASTM A36 OR A307, GRADE A
   - HEAVY HEX ANCHOR BOLTS: ASTM F1554, GRADE 36
   - ANCHOR RODS: ASTM F1554, GRADE 36
   - THREADED RODS: ASTM A36
3. BOLTS, ANCHOR BOLTS, EXPANSION BOLTS, ETC., SHALL BE INSTALLED WITH STEEL WASHERS. TYPE N BOLTS PER AISC "STEEL CONSTRUCTION MANUAL" AND SHALL BE TIGHTENED TO THE SNUG-TIGHT CONDITION AS DEFINED PER AISC UNLESS NOTED OTHERWISE. ALL HIGH STRENGTH BOLTING SHALL BE INSPECTED BY AN INDEPENDENT TESTING LABORATORY TO ENSURE BOLT TENSION.
4. SHOP PAINT ALL STEEL SURFACES WITH FABRICATOR'S STANDARD RUST-INHIBITING PRIMER EXCEPT AT SURFACES ENCASED IN CONCRETE, SURFACES TO RECEIVE FIREPROOFING, OR SURFACES ENCLOSED WITHIN THE BUILDING FINISHES.
5. BEAMS, COLUMNS AND BRACES SHALL NOT BE SPLICED WITHOUT THE PRIOR APPROVAL OF THE STRUCTURAL ENGINEER.
6. DRYPACK FOR COLUMN BASE PLATES AND BEAM BEARING PLATES SHALL BE FIRE STAR GROUT OR AN EQUAL NON-METALLIC SHRINKAGE-RESISTANT GROUT. F'c = 5000 PSI MINIMUM. INSTALL GROUT UNDER BEARING PLATES BEFORE FRAMING MEMBER IS INSTALLED. AT COLUMNS, INSTALL GROUT UNDER BASEPLATES AFTER COLUMN HAS BEEN PLUMBED BUT PRIOR TO FLOOR OR ROOF INSTALLATION.
7. ALL WELDING PER LATEST AMERICAN WELDING SOCIETY STANDARDS, EXCEPT STEEL JOISTS AND JOIST GIRDERS SHALL COMPLY WITH SJI STANDARDS. ALL WELDING SHALL BE DONE BY WELDERS HOLDING VALID CERTIFICATES ISSUED BY AN ACCEPTED TESTING AGENCY AND HAVING CURRENT EXPERIENCE IN THE TYPE OF WELDS SHOWN ON THE DRAWINGS OR NOTES. ALL WELDS ON DRAWINGS ARE SHOWN AS SHOP WELDS. CONTRACTOR MAY SHOP WELD OR FIELD WELD AT THEIR DISCRETION. SHOP WELDS AND FIELD WELDS SHALL BE SHOWN ON THE SHOP DRAWINGS SUBMITTED FOR REVIEW. FULL PENETRATION WELDS SHALL BE TESTED AND CERTIFIED B AN INDEPENDENT TESTING LABORATORY.
8. ALL WELDING DONE BY E70 SERIES LOW HYDROGEN RODS UNLESS NOTED OTHERWISE. FOR ASTM A706 GRADE 60 REINFORCING BARS, USE E80 SERIES.

I. LOW VELOCITY POWDER ACTUATED FASTENERS (P.A.F.):

1. SHOT PINS WHERE INDICATED SHALL BE 0.157" SHANK DIAMETER HILTI X-U FASTENERS INSTALLED AND COMPLYING WITH ICC REPORT ESR-2269. SHOT PINS SHALL HAVE 1" MINIMUM PENETRATION INTO CONCRETE U.N.O.

J. POST-INSTALLED ANCHORS:

1. EPOXY BOLTS OR DOWELS SHALL BE A THREADED ROD OR REINFORCING STEEL INSTALLED WITH ONE OF THE FOLLOWING PRODUCTS SATISFYING CRACKED CONCRETE REQUIREMENTS IN ACCORDANCE WITH CURRENT ACI PUBLICATION.
   - SIMPSON "SET XP" ICC REPORT ESR-2508
   - SIMPSON "SET-3G" ICC REPORT ESR-4057
2. EPOXY BOLTS FOR MASONRY SHALL BE ONE OF THE FOLLOWING APPROVED PRODUCTS.
   - SIMPSON "SET" ICC REPORT ESR-1772
   - HILTI "HIT-HY 270" ICC REPORT ESR-4143
3. EXPANSION BOLTS FOR CONCRETE SHALL BE ONE OF THE FOLLOWING APPROVED PRODUCTS SATISFYING CRACKED CONCRETE REQUIREMENTS IN ACCORDANCE WITH CURRENT ACI PUBLICATION.
   - HILTI "KWIK BOLT TZ" ICC REPORT ESR-1917
   - SIMPSON "STRONG BOLT 2 WEDGE ANCHOR" ICC REPORT ESR-3037
4. EXPANSION BOLTS OR SCREW BOLTS FOR MASONRY SHALL BE ONE OF THE FOLLOWING APPROVED PRODUCTS:
   - HILTI "KWIK BOLT III" ICC REPORT ESR-1385
   - SIMPSON "TITEN HD" ICC REPORT ESR-1056
   - SIMPSON "WEDGE-ALL" ICC REPORT ESR-1396
5. SCREW BOLTS FOR CONCRETE SHALL BE ONE OF THE FOLLOWING APPROVED PRODUCTS SATISFYING CRACKED CONCRETE REQUIREMENTS IN ACCORDANCE WITH CURRENT ACI PUBLICATION.
   - SIMPSON "TITEN HD" ICC REPORT ESR-2713
6. THE CONTRACTOR MAY NOT USE SUBSTITUTES FOR EPOXY OR EXPANSION ANCHORS WITHOUT PRIOR APPROVAL OF THE STRUCTURAL ENGINEER.
7. FOR MINIMUM EMBEDMENT LENGTH SEE DETAILS AND NOTES. INSTALL ALL BOLTS AS OUTLINED IN THE MANUFACTURER'S SPECIFICATIONS, UTILIZING PROPER SIZE AND TYPE OF DRILL, HOLE CLEANING, DRIVING AND TIGHTENING BOLT.
8. SPECIAL INSPECTION OF ALL POST-INSTALLED ANCHORS IS REQUIRED.

K. ROUGH CARPENTRY AND PLYWOOD:

1. WOOD FRAMING SHALL CONFORM TO IBC CHAPTER 23. FRAMING LUMBER SHALL COMPLY WITH THE 2018 EDITION OF THE NATIONAL DESIGN SPECIFICATION. MAXIMUM MOISTURE CONTENT SHALL NOT EXCEED 19 PERCENT. ALL SAWN LUMBER SHALL BE STAMPED WITH THE GRADE MARK OF AN APPROVED LUMBER GRADING AGENCY. ALL SAWN LUMBER SHALL BE DOUGLAS FIR-LARCH WITH THE FOLLOWING MINIMUM GRADES:
   JOISTS: NO. 2
   BEAMS/LINTELS
   4X MEMBERS: NO. 2
   6X MEMBERS: NO. 1
   POSTS
   4X MEMBERS: NO. 2
   6X MEMBERS: NO. 1
   STUDS: NO.2
   LEDGERS AND TOP PLATES: NO. 2
2. ALL WOOD STRUCTURAL PANELS SHALL CONFORM TO DOC PS-1 OR PS-2 STANDARDS, SHALL HAVE AN EXTERIOR OR EXPOSURE 1 CLASSIFICATION AND SHALL BEAR THE STAMP OF AN APPROVED TESTING AGENCY. WHERE PLYWOOD IS USED, LAY UP PLYWOOD WITH FACE GRAIN PERPENDICULAR TO SUPPORTS AND STAGGER JOINTS. AT SHEAR WALLS, PROVIDE 2X BLOCKING AT ALL UNSUPPORTED EDGES. WHERE SCREWS ARE INDICATED FOR WOOD TO WOOD ATTACHMENTS, USE WOOD SCREWS. ALL WOOD STRUCTURAL PANELS SHALL BE OF THE FOLLOWING NOMINAL THICKNESS, SPAN/INDEX RATIO AND SHALL BE ATTACHED AS FOLLOWS UNLESS NOTED OTHERWISE:
   a. ROOF:
      - THICKNESS: 1/2"
      - SPAN/INDEX RATIO: 32/16
      - EDGE ATTACHMENT: 8d AT 6" O.C.
      - INTERMEDIATE ATTACHMENT: 8d AT 12" O.C.
   b. WALL**:
      - THICKNESS: 3/8"
      - SPAN/INDEX RATIO: 24/0
      - EDGE ATTACHMENT: 8d AT 6" O.C.
      - INTERMEDIATE ATTACHMENT: 8d AT 12" O.C.

   * SCREWS AT FLOOR SHALL BE #8 X 2 1/2" LONG FOR SHEATHING LESS THAN 1" THICK. ALL FLOOR SHEATHING SHALL BE GLUED TO JOISTS WITH AN APA AFG-01 QUALIFIED GLUE. AT CONTRACTORS OPTION, USE RING SHANK NAILS OF THE SAME SHANK DIAMETER AS #8 SCREWS AT THE SAME SPACING NOTED.
   ** SEE SHEAR WALL SCHEDULE.
3. OTHER APA RATED PANELS (I.E. ORIENTED STRAND BOARD) MAY BE SUBSTITUTED FOR PLYWOOD PROVIDED THAT THEY COMPLY WITH PRODUCT STANDARD 2-10 AND HAVE THE SAME EXPOSURE DURABILITY CLASSIFICATION, SPAN RATING AND NOMINAL THICKNESS.
4. STUD WALLS SHALL BE 2X6 AT 16" O.C. U.N.O. ON THE PLANS. PLATE ANCHOR BOLTS SHALL BE 1/2" DIAMETER PLACED NOT TO EXCEED 4'-0" O.C. MAXIMUM U.N.O. ANCHOR BOLTS SHALL BE PLACED AT ALL JAMBS, CORNERS, INTERSECTIONS AND WALL ENDS. ALL BOTTOM PLATES SHALL HAVE A MINIMUM OF 2 ANCHOR BOLTS. ALL BOTTOM PLATES OR SILLS ON CONCRETE SLABS ON GRADE AND ON CONCRETE OR MASONRY FOUNDATIONS SHALL BE PRESSURE TREATED WOOD STAMPED BY AN APPROVED AGENCY.
5. DO NOT NOTCH, DRILL OR SPLICE JOISTS, BEAMS OR LOAD BEARING OR STRUCTURAL STUDS WITHOUT PRIOR APPROVAL OF STRUCTURAL ENGINEER.
6. DOUBLE UP FLOOR JOISTS AND BLOCKING UNDER PARTITIONS. DOUBLE UP JOISTS BELOW MECHANICAL EQUIPMENT. PROVIDE 2" SOLID BLOCKING AT MIDSPAN AND AT SUPPORTS OF ALL JOISTS.
7. DOUBLE UP STUDS AT JAMBS AND AS REQUIRED UNDER BEAMS IN BEARING WALLS. EVERY OTHER STUD OF A WOOD FRAME BEARING WALL SHALL HAVE A SIMPSON H3 OR RSP4 ANCHOR TOP AND BOTTOM. PROVIDE 2X BLOCKING AT MID-HEIGHT OF BEARING STUD WALLS.
8. ALL NAILING SHALL BE WITH COMMON NAILS. ALL NAILING NOT NOTED SHALL BE PER TABLE 2304.10.1 OF THE INTERNATIONAL BUILDING CODE. WOOD CONNECTORS SHALL BE AS MANUFACTURED BY SIMPSON STRONG-TIE COMPANY, INC. OR OTHER MANUFACTURER WITH CURRENT AND EQUIVALENT ICC APPROVAL. ALL NAIL HOLES IN CONNECTORS SHALL BE FILLED WITH NAIL OF THE LARGEST SIZE INDICATED IN THE MANUFACTURER'S CATALOG U.N.O. MULTIPLE, SKEWED AND/OR SLOPED HANGERS SHALL BE SUPPLIED BY THE CONTRACTOR WHERE NECESSARY.
9. ALL FABRICATION SHALL BE PERFORMED ON THE PREMISES OF A FABRICATOR REGISTERED AND APPROVED TO PERFORM SUCH WORK WITHOUT SPECIAL INSPECTION.

L. PREFABRICATED WOOD TRUSSES:

1. THE TRUSS MANUFACTURER SHALL BE RESPONSIBLE FOR THE COMPLETE DESIGN, FABRICATION AND ERECTION PROCEDURES FOR ALL TRUSSES, BLOCKING, INCIDENTAL FRAMING, FRAMING FOR OPENINGS NOW SHOWN ON DRAWINGS, TEMPORARY AND PERMANENT BRACING AND BRIDGING, CONNECTIONS, HOLDOWN ANCHORS AND ALL OTHER ITEMS REQUIRED FOR A COMPLETE AND SAFE INSTALLATION OF THE TRUSS SYSTEM. TRUSS CONFIGURATIONS ARE SHOWN ON THE DRAWINGS.
2. PREFABRICATED WOOD TRUSSES SHALL BE DESIGNED AND FABRICATED IN ACCORDANCE WITH IBC CHAPTER 23 TO SUPPORT THEIR OWN WEIGHT PLUS SUPERIMPOSED DEAD, LIVE, SNOW, LATERAL AND MECHANICAL EQUIPMENT LOADS SHOWN ON THE DRAWINGS. ROOF TRUSSES SHALL BE DESIGNED TO ACCOMMODATE A FUTURE TOP CHORD DEAD LOAD OF 300 POUNDS AT ANY LOCATION. CONTRACTOR SHALL SUBMIT DESIGN CALCULATIONS AND SHOP DRAWINGS SEALED BY A REGISTERED ENGINEER IN THE STATE IN WHICH THE PROJECT IS LOCATED FOR REVIEW PRIOR TO MANUFACTURE. CALCULATIONS AND SHOP DRAWINGS SHALL INCLUDE BY NOT BE LIMITED TO

   DESIGN LOADS, ALLOWABLE STRESSES, STRESS DIAGRAMS, TRUSS TO TRUSS CONNECTIONS, SPECIAL BEARING OR CONNECTION DETAILS AND ERECTION DRAWINGS.
3. ALL TOP AND BOTTOM CHORD MATERIAL SHALL BE FINGER-JOINTED AT SPLICES BETWEEN PANEL POINTS AND TENSION TESTED TO A MINIMUM OF 1.2

   TIMES THE ALLOWABLE TENSION PARALLEL TO THE GRAIN PER NATIONAL DESIGN SPECIFICATIONS.
4. LIVE LOAD DEFLECTION SHALL BE LIMITED TO SPAN/360 AT SIMPLE SPAN MEMBERS AND 2X SPAN/360 AT CANTILEVER MEMBERS. ROOF TRUSS DURATION FACTOR SHALL BE 1.25 FOR COMBINED DEAD AND LIVE LOADS AND 1.60 FOR ANY LOAD COMBINATION INCLUDING WIND OR SEISMIC. ALL TRUSSES SHALL BE CAMBERED FOR 1.5 TIMES THE DESIGN DEAD LOAD DEFLECTION.
5. BRACING AND BRIDGING SIZES AND SPACING BY TRUSS MANUFACTURER IN ACCORDANCE WITH THE LATEST RECOMMENDATIONS OF THE TRUSS PLATE INSTITUTE (TPI). INSTALL AND LAP BRACING AND BRIDGING PER LATEST TPI RECOMMENDATIONS. SPECIAL BRACING MAY BE REQUIRED FOR MULTIPLE OR CANTILEVER TRUSSES AND WIND UPLIFT CONDITIONS.
6. ADDITIONAL TRUSSES SHALL BE SUPPLIED AS REQUIRED TO SUPPORT MECHANICAL EQUIPMENT.
7. ALL CONNECTIONS SHALL HAVE CURRENT ICC APPROVAL. ALL TRUSS TO TRUSS CONNECTIONS ARE THE DESIGN RESPONSIBILITY OF THE TRUSS MANUFACTURER. ALL PRESS-PLATE CONNECTORS SPECIFIED BY THE MANUFACTURER SHALL BE DESIGNED AND SIZED FOR TWICE THE CALCULATED LOAD. MULTIPLE TRUSS MEMBERS SHALL BE FASTENED TOGETHER TO ALLOW TRANSFER OF SHEAR AND TENSION FORCES OF 200 PLF MINIMUM AT PLYWOOD SHEATHING JOINTS AND TO PREVENT CROSS GRAIN BENDING OF TOP CHORDS. ATTACHMENT SHALL BE A CONTINUOUS 20 GAGE METAL PLATE OR OTHER APPROVED MEANS. METHOD OF ATTACHMENT SHALL BE INDICATED ON SHOP DRAWINGS FOR REVIEW.
8. ALL FABRICATION SHALL BE PERFORMED ON THE PREMISES OF A FABRICATOR REGISTERED AND APPROVED TO PERFORM SUCH WORK WITHOUT SPECIAL INSPECTION.

M. LAMINATED VENEER LUMBER (LVL):

1. LVL PRODUCTS SHALL CONFIRM WITH THE PROVISION OF APA/EWS PRL-501 AND ICC ESR-1387.
2. ALL MEMBERS SHALL HAVE THE FOLLOWING MINIMUM DSIGN STRESSES:
   - MICROLAM LVL 2.0E BEAMS: Fb =2,600 PSI, Fv = 2,600 PSI, Fv = 285 PSI, E= 2,000,000 PSI, Fc= 2,510 PSI
   - PARALLUM PSL 2.0E BEAMS: Fb =2,600 PSI, Fv = 2,600 PSI, Fv = 290 PSI, E= 2,000,000 PSI, Fc= 2,900 PSI
   - PARALLUM PSL 1.8E COLUMNS: Fb =2,400 PSI, Fv = 190 PSI, Fv = 290 PSI, E= 1,800,000 PSI, Fc= 2500 PSI

N. SHOP DRAWINGS AND PRODUCT DATA:

1. SHOP DRAWINGS AND/OR PRODUCT DATA SHALL BE SUBMITTED FOR ALL STRUCTURAL ITEMS IN ADDITION TO ANY STRUCTURAL ITEMS REQUIRED BY THE ARCHITECTURAL DRAWINGS OR SPECIFICATIONS PRIOR TO FABRICATION AND/OR CONSTRUCTION IN THE FIELD. CONSTRUCTION DOCUMENTS SHALL NOT BE REPRODUCED FOR USE AS SHOP DRAWINGS.
2. THE GENERAL CONTRACTOR SHALL REVIEW AND STAMP ALL SHOP DRAWINGS AND PRODUCT DATA FOR CONFORMANCE WITH THE CONSTRUCTION DRAWINGS PRIOR TO SUBMITTAL. ANY SHOP DRAWINGS OR PRODUCT DATA NOT REVIEWED AND STAMPED BY THE GENERAL CONTRACTOR WILL BE RETURNED WITHOUT REVIEW. THE CONTRACTOR SHALL CLOUD OR FLAG ALL ITEMS NOT IN ACCORDANCE WITH THE CONTRACT DOCUMENTS. VERIFY ALL DIMENSIONS WITH THE ARCHITECT.
3. ANY CHANGES, SUBSTITUTIONS, OR DEVIATIONS FROM THE ORIGINAL CONTRACT DOCUMENTS SHALL BE CLOUDED BY THE MANUFACTURER OR FABRICATOR. ANY CHANGES, SUBSTITUTIONS OR DEVIATIONS WHICH ARE NOT CLOUDED OF FLAGGED BY SUBMITTED PARTIES, SHALL NOT BE CONSIDERED ALLOWED AFTER THE ENGINEER'S REVIEW, UNLESS NOTED ACCORDINGLY BY THE STRUCTURAL ENGINEER.
4. THE STRUCTURAL ENGINEER RESERVES THE RIGHT TO ALLOW OR NOT ALLOW ANY CHANGES TO THE ORIGINAL CONTRACT DOCUMENTS AT ANY TIME BEFORE OR AFTER SHOP DRAWING REVIEW. THE ENGINEER RESERVES TH RIGHT TO MAKE CHANGES TO THE CONTRACT DOCUMENTS AT ANY TIME BEFORE OR AFTER SHOP DRAWING REVIEW.
5. PROVIDE ELECTRONIC PDF SUBMITTALS IN A TIMELY MANNER TO ALLOW A MINIMUM OF FIVE WORKING DAYS FOR THE ENGINEER'S REVIEW. THE PDF FILES SHALL ALLOW FOR COMMENTS TO BE PLACED ON THE FILES DURING REVIEW BY THE STRUCTURAL ENGINEER.
6. THE SHOP DRAWINGS DO NOT REPLACE THE ORIGINAL CONTRACT DOCUMENTS. ITEMS OMITTED OR SHOWN INCORRECTLY AND WHICH ARE NOT NOTED AS ALLOWED BY THE STRUCTURAL ENGINEER OR ARCHITECT ARE NOT TO BE CONSIDERED CHANGES TO THE ORIGINAL CONTRACT DOCUMENTS. IT IS THE CONTRACTOR'S RESPONSIBILITY TO ENSURE THAT ITEMS OMITTED OR SHOWN INCORRECTLY ARE CONSTRUCTED IN ACCORDANCE WITH THE ORIGINAL CONTRACT DOCUMENTS. SHOP DRAWINGS PROCESSED BY THE ENGINEER SHALL NOT BE CONSIDERED CHANGE ORDERS.
7. THE ENGINEERS REVIEW IS INTENDED ONLY AS AN AID TO THE CONTRACTOR IN OBTAINING CORRECT SHOP DRAWINGS. RESPONSIBILITY FOR CORRECTNESS AND COMPLETENESS SHALL REST WITH THE CONTRACTOR. SHOP DRAWINGS WILL BE RETURNED FOR RESUBMITTAL IF SIGNIFICANT ERRORS ARE FOUND DURING REVIEW.
8. THE ADEQUACY OF ENGINEERING DESIGNS AND LAYOUT PERFORMED BY OTHERS RESTS WITH THE DESIGNING OR SUBMITTING PARTY.
9. ALL ENGINEERING DESIGNS AND LAYOUTS PERFORMED BY OTHERS SHALL BE SEALED BY A REGISTERED ENGINEER LOCATED IN THE STATE IN WHICH THE PROJECT IS LOCATED.

O. DEFERRED SUBMITTALS:

1. THE FOLLOWING ITEMS SHALL BE ISSUES AS A DEFERRED SUBMITTAL PER IBC SECTION 107.3.4.1.
   - PREFABRICATED WOOD TRUSSES.
2. ALL ITEMS ISSUED AS DEFERRED SUBMITTALS SHALL BE ISSUED A MINIMUM OF 30 DAYS PRIOR TO INSTALLATION AND SHALL NOT BE INSTALLED UNTIL THEIR DESIGN AND SUBMITTAL DOCUMENTS HAVE BEEN REVIEWED FOR GENERAL CONFORMANCE TO THE DRAWINGS BY THE ENGINEER OR RECORD AND THE BUILDING OFFICIAL. A COPY OF THE DEFERRED SUBMITTAL DOCUMENTS SHALL BE FORWARDED TO THE CITY BUILDING OFFICIAL AFTER THE ENGINEER OR RECORD HAS REVIEWED THE DOCUMENTS AND PRIOR TO ERECTION OF THE DEFERRED SUBMITTAL ITEMS.

P. STEEL DECK:

1. STEEL ROOF DECK SHALL BE GALVANIZED OR PAINTED STEEL WITH THE FOLLOWING MINIMUM PROPERTIES AND ATTACHMENT:
   - FY = 50 KSI
   - 1 1/2" DEEP X 36" WIDE, 20 GAGE
   - MINIMUM I+ = 0.216 IN^4
   - MINIMUM S+ = 0.218 IN^3
   - MINIMUM DIAPHRAGM SHEAR CAPACITY = 348 LBS/FT
   - (4) WELDS CONSISTING OF (2) 1" X 3/8" ARC SEAM WELDS AT SUPPORTS ADJACENT TO SIDELAP AND (2) 3/4" ARC SPOT WELDS AT SUPPORTS IN INTERIOR FLUTES. WELDS TO BE LOCATED AT ENDS, END LAPS AND INTERMEDIATE SUPPORTS.
   - 1" X 3/8" ARC SEAM WELDS AT 12" O.C. AT PERIMETER BEAMS AND OPENING EDGES AND MEMBERS RUNNING PARALLEL TO THE DECK.
   - PUNCHLOK II VSC2 AT 24" SIDELAP ATTACHMENT.
2. STEEL DECK SHALL BE ERECTED IN ACCORDANCE WITH MANUFACTURER'S RECOMMENDATIONS AS 3 SPAN MINIMUM.
3. ALL WELDING SHALL BE PERFORMED BY WELDERS EXPERIENCED IN LIGHT GAGE STEEL DECK WORK. WELD DECK WITH E60 SERIES LOW HYDROGEN RODS FOR DECKS 22 GAGE OR GREATER. ALL EXPOSED WELDS SHALL BE DE-SLAGGED, CLEANED AND PRIMED WITH A ZINC-RICH PRIMER AND TOUCHED-UP WITH PAINT.
4. CONCENTRATED AND HANGING LOADS ON STEEL ROOF DECK SHALL BE LIMITED TO SUSPENDED ACOUSTICAL CEILINGS AND LIGHT DUCT WORK. ALL OTHER CONCENTRATED AND HANGING LOADS ARE NOT ALLOWED WITHOUT PRIOR APPROVAL OF THE STRUCTURAL ENGINEER.

Q. SIMPSON STRONG WALL SHEARWALLS:

1. SIMPSON STRONG WALLS PER SIMPSON STRONG WALL LITERATURE, STANDARD DETAILS AND ICC ESR-2652.

BRAMIC DESIGN GROUP PLLC
8003 S. GALILEO LN.
TUCSON, AZ 85747
PHONE: (520) 401-9183

COPYRIGHT NOTICE
This drawing is the property of the above referenced Professional and is not to be used for any purpose other than the specific project and site names herein, and cannot be reproduced in any manner without the express written permission from the Professional.

DATE	ISSUE
05.17.24	ISSUED FOR PERMIT REVIEW SET
07.08.24	TITLE BLOCK UPDATE

DATE	REVISION

PROFESSIONAL SEAL

PROFESSIONAL IN CHARGE
JSR

PROJECT MANAGER
GW

QUALITY CONTROL
JSR

DRAWN BY
GS

PROJECT ADDRESS
2920 S. PARK AVE
TUCSON ARIZONA 85713

Valvoline Instant Oil Change

VALVOLINE INSTANT OIL CHANGE

ennovative.

Unsealed drawings shall be considered preliminary designs and shall not be used for construction or final bidding.

These drawings are copyrighted by ennovative. LLC. Drawings shall not be reused or reproduced, whole or in part, without the written consent of ennovative. LLC. ©

JOB: 23073

BDG PROJECT NUMBER
23-849

SHEET NAME

GENERAL STRUCTURAL NOTES

SHEET #

S1.0

STONE- HARDIE PANEL OPTION

SPECIAL INSPECTION

R. SPECIAL INSPECTIONS AND TESTING:

1. THE OWNER SHALL EMPLOY SPECIAL INSPECTORS TO PROVIDE INSPECTION AND TESTING DURING CONSTRUCTION OF THE TYPES OF WORK REQUIRING SPECIAL INSPECTION AS INDICATED ON THE DRAWINGS.
2. SPECIAL INSPECTIONS SHALL BE PERFORMED BY A QUALIFIED INSPECTOR APPROVED BY THE ARCHITECT, STRUCTURAL ENGINEER OF RECORD AND THE BUILDING OFFICIAL.
3. SPECIAL INSPECTIONS SHALL BE PERFORMED UNDER THE DIRECT SUPERVISION OF A STATE REGISTERED STRUCTURAL OR CIVIL ENGINEER WHO IS FAMILIAR WITH THE STRUCTURAL DESIGN OF THIS PROJECT. THE SPECIAL INSPECTION CERTIFICATE SHALL BE SEALED BY THE SUPERVISING REGISTERED ENGINEER. THE CONTRACTOR SHALL BE RESPONSIBLE FOR PROVIDING A MINIMUM OF 24 HOURS NOTICE TO THE SPECIAL INSPECTOR AND THE TESTING LABORATORY PRIOR TO BEGINNING ANY WORK FOR WHICH SPECIAL INSPECTION OR TESTING IS REQUIRED.
4. THE SPECIAL INSPECTOR SHALL OBSERVE THE WORK ASSIGNED FOR THE CONFORMANCE TO THE APPROVED CONSTRUCTION DOCUMENTS.
5. THE SPECIAL INSPECTOR SHALL PROVIDE INSPECTION REPORTS TO THE BUILDING OFFICIAL AND ENGINEER OR ARCHITECT OF RECORD. REPORTS SHALL INDICATE THAT THE INSPECTED WORK WAS DONE IN CONFORMANCE TO APPROVED CONSTRUCTION DOCUMENTS. DISCREPANCIES SHALL BE BROUGHT TO THE IMMEDIATE ATTENTION OF THE CONTRACTOR FOR CORRECTION, THEN, IF UNCORRECTED, TO THE ENGINEER OR ARCHITECT OF RECORD AND THE BUILDING OFFICIAL PRIOR TO THE COMPLETION OF THAT PHASE OF THE WORK.
6. UPON COMPLETION OF THE ASSIGNED WORK, THE SPECIAL INSPECTOR SHALL COMPLETE AND SIGN THE APPROPRIATE FORMS CERTIFYING THAT, TO THE BEST OF THEIR KNOWLEDGE, THE WORK IS IN CONFORMANCE WITH THE APPROVED CONSTRUCTION DOCUMENTS AND THE APPLICABLE WORKMANSHIP PROVISIONS OF THE CODE.

INTERPRETATION OF DRAWINGS

TYPICAL NOTES

1. FOR APPLICABLE CODES AND STANDARDS, MATERIAL STRENGTHS AND CONSTRUCTION REQUIREMENTS, SEE GENERAL STRUCTURAL NOTES AND SPECIFICATIONS.
2. VERIFY ALL DIMENSIONS WITH ARCHITECTURAL DRAWINGS PRIOR TO START OF CONSTRUCTION. RESOLVE ANY DISCREPANCY WITH ARCHITECT. DO NOT SCALE DRAWINGS.
3. FOR CLARITY, ALL EXTERIOR SLABS AND SIDEWALKS MAY NOT BE SHOWN. FOR EXACT DIMENSION, LOCATIONS, JOINTS AND SCORE LINES, SEE ARCHITECTURAL DRAWINGS.
4. FOR CLARITY, ALL ROOF, FLOOR AND WALL OPENINGS MAY NOT BE SHOWN ON STRUCTURAL DRAWINGS. FOR EXACT SIZE, NUMBER AND LOCATION OF OPENINGS, SEE ARCHITECTURAL, MECHANICAL, ELECTRICAL AND PLUMBING DRAWINGS. FOR FRAMING AT OPENINGS, SEE TYPICAL STRUCTURAL DETAILS. VERIFY ALL SIZES, WEIGHTS AND LOCATIONS OF MECHANICAL AND ELECTRICAL EQUIPMENT, DUCTS, ETC. WITH MECHANICAL AND ELECTRICAL ENGINEERS THROUGH ARCHITECT.
5. DETAILS MARKED "TYPICAL" MAY OR MAY NOT BE CUT ON PLANS. THEY SHALL APPLY UNLESS NOTED OTHERWISE.

PLAN LEGEND

SYMBOL	DESCRIPTION	REMARKS
TOP # NOTE	DETAIL CUT	01-99 SEE TYPICAL DETAILS 101-199 SEE FOUNDATION DETAILS 201-299 SEE FLOOR FRAMING DETAILS 301-399 SEE ROOF FRAMING DETAILS
1	SHEET KEYNOTE	SEE SHEET KEYNOTES ON EACH PLAN SHEET
	WOOD / STEEL STUD WALL	SEE FOUNDATION AND FRAMING PLANS
	CONCRETE WALL	
	HIDDEN STRUCTURAL WALL	
	LINTEL BELOW	
	SHEAR WALL	
	NON-STRUCTURAL WALL	
	OPENING	SEE TYPICAL NOTE 4 ABOVE
B (X)	BEAM	(X) DENOTES HEADED STUDS.
H_	SHEAR WALL HOLDOWN	SEE SCHEDULES
F_	FOOTING	
T_	TRUSS	
L_	LEDGER	
W_	WALL REINFORCING	
WF_	WALL FOOTING	
LT_	LINTEL	
SW_	SHEAR WALL	
TG_	TRUSS GIRDER	

STRUCTURAL ABBREVIATIONS

AFF	ABOVE FINISHED FLOOR	ICC	INTERNATIONAL CODE COUNCIL
A.B.C.	AGGREGATE BASE COURSE	K	KIP(S)
ACI	AMERICAN CONCRETE INSTITUTE	LBS	POUNDS
AISC	AMERICAN INSTITUTE OF STEEL CONSTRUCTION	(LLV)	LONG LEG VERTICAL
		(LSV)	LONG SIDE VERTICAL
AITC	AMERICAN INSTITUTE OF TIMBER CONSTRUCTION	MAX	MAXIMUM
		MCJ	MASONRY CONTROL JOINT
APA	AMERICAN PLYWOOD ASSOCIATION	MIN	MINIMUM
ASTM	AMERICAN SOCIETY FOR TESTING AND MATERIALS	N.I.C.	NOT IN CONTRACT
		N.T.S.	NOT TO SCALE
AWS	AMERICAN WELDING SOCIETY	OPP	OPPOSITE
BOD	BOTTOM OF DECK	O.C.	ON CENTER
BOF	BOTTOM OF FOOTING	PCF	POUNDS PER CUBIC FOOT
BOS	BOTTOM OF SHEATING	PCI	PRESTRESSED CONCRETE INSTITUTE
CABO	COUNCIL OF AMERICAN BUILDING OFFICIALS	PJ	PANEL JOINT
		PLF	POUNDS PER LINEAR FOOT
CJ	CONSTRUCTION/CONTROL JOINT	PRE-ENG	PRE-ENGINEERED
℄	CENTERLINE	PSF	POUNDS PER SQUARE FOOT
CLR	CLEAR	PSI	POUNDS PER SQUARE INCH
CMU	CONCRETE MASONRY UNIT	PTI	POST-TENSIONING INSTITUTE
CONT	CONTINUOUS	RS	ROUGH SAWN
CRSI	CONCRETE REINFORCING STEEL INSTITUTE	SIM	SIMILAR
		(SLV)	SHORT LEG VERTICAL
d	PENNY (NAILS)	(SSV)	SHORT SIDE VERTICAL
D.B.A.	DEFORMED BAR ANCHOR	T&G	TONGUE AND GROOVE
D.B.L.	DOUBLE JOISTS	T_f	FLANGE THICKNESS
D.F.	DOUGLAS FIR-LARCH	T_w	WEB THICKNESS
EFFE	EXISTING FINISHED FLOOR ELEVATION	TYP	TYPICAL
EQ	EQUAL	TOF	TOP OF FOOTING
FFE	FINISHED FLOOR ELEVATION	TOS	TOP OF STEEL
GLB	GLUED-LAMINATED BEAM	TOW	TOP OF WALL
G.S.N.	GENERAL STRUCTURAL NOTES	U.N.O.	UNLESS NOTED OTHERWISE
HSS	HALLOW STRUCTURAL SECTION	W.P.	WORKING POINT
IBC	INTERNATIONAL BUILDING CODE	W.W.F.	WELDED WIRE FABRIC

STATEMENT OF STRUCTURAL SPECIAL INSPECTIONS PER IBC 2018

1. SPECIAL INSPECTIONS / TESTING -
"SPECIAL STRUCTURAL INSPECTIONS" ARE NOT TO BE CONFUSED WITH, NOR RELIEVE THE OWNER OR OWNER'S AGENT FROM THE JURISDICTION BUILDING DEPARTMENT INSPECTIONS REQUIRED BY IBC SECTION 110. SPECIAL INSPECTIONS DO NOT RELIEVE THE CONTRACTOR FROM COMPLYING WITH THE CONTRACT DOCUMENTS. MEANS AND METHODS AND JOBSITE SAFETY ARE SOLELY THE RESPONSIBILITY OF THE CONTRACTOR. SEE SPECIFICATIONS FOR ADDITIONAL TESTING REQUIREMENTS.

2. REPORTING FOR SPECIAL INSPECTION -
SPECIAL INSPECTION AND TESTING REPORTS SHALL BE COMPLETED AND DISTRIBUTED ON A WEEKLY BASIS. REPORT DEFICIENCIES THAT HAVE NOT BEEN RESOLVED IMMEDIATELY. PROVIDE COPIES OF REPORTS TO: CONTRACTOR, OWNER, ARCHITECT AND STRUCTURAL ENGINEER OF RECORD.SPECIAL INSPECTOR TO KEEP A NON-COMPLIANCE LIST DOCUMENTING ITEMS INSPECTED NOT MEETING APPROVED CONSTRUCTION DOCUMENTS AND WHEN / HOW RESOLVED.

3. REFER TO IBC SECTION 1705 AND ARCHITECTURAL, MECHANICAL, ELECTRICAL, AND PLUMBING CONSTRUCTION DOCUMENTS FOR ADDITIONAL NON-STRUCTURAL SPECIAL INSPECTION ITEMS.

4. ANY FABRICATOR NEEDS TO BE APPROVED BY THE JURISDICTION BUILDING DEPARTMENT OR BE CERTIFIED BY AN INDUSTRY RECOGNIZED AGENCY QUALIFIED FOR SUCH CERTIFICATION. CERTIFICATION OF FABRICATORS ARE TO BE PROVIDED TO THE STRUCTURAL ENGINEER. THE SPECIAL INSPECTION ITEMS CONTAINED HEREIN ARE REQUIRED FOR ALL NON-CERTIFIED FABRICATORS

5. DEFINITION OF "CONTINUOUS" AND "PERIODIC" SPECIAL INSPECTIONS:
CONTINUOUS: THE FULL-TIME OBSERVATION OF WORK REQUIRING SPECIAL INSPECTION BY AN APPROVED SPECIAL INSPECTOR WHO IS PRESENT IN THE AREA WHERE THE WORK IS BEING PERFORMED.
PERIODIC: THE PART-TIME OR INTERMITTENT OBSERVATION OF WORK REQUIRING SPECIAL INSPECTION BY AN APPROVED SPECIAL INSPECTOR WHO IS PRESENT IN THE AREA WHERE THE WORK HAS BEEN OR IS BEING PERFORMED AND AT THE COMPLETION OF THE WORK.

WHERE "PERIODIC" SPECIAL INSPECTION IS REQUIRED, "PART-TIME" OR "INTERMITTENT" MEANS THAT INSPECTION OF THE TASK SHOULD BE PERFORMED FROM TIME TO TIME DURING THE PROGRESS OF THE TASK. THE PERIOD OF TIME BETWEEN INSPECTIONS VARIES GREATLY FOR DIFFERENT TYPES OF WORK DEPENDING ON THE TYPE OF INSPECTION DONE.

THE PERIOD OF TIME BETWEEN INSPECTIONS ALSO DEPENDS ON THE PACE OF THE CONSTRUCTION, THE NUMBER OF WORKERS, THE QUALITY OF THE WORKMANSHIP, AND OTHER FACTORS. IT IS THE RESPONSIBILITY OF THE SPECIAL INSPECTOR TO PROVIDE INSPECTIONS AT AN APPROPRIATE FREQUENCY AND AT APPROPRIATE TIMES DURING CONSTRUCTION. THE INSPECTOR MUST HAVE ADEQUATE EXPERIENCE AND EXHIBIT GOOD JUDGEMENT IN DETERMINING THE TIMING AND FREQUENCY OF INSPECTIONS.

SPECIAL INSPECTIONS AND TESTS OF CONCRETE CONSTRUCTION

SPECIAL INSPECTION REQUIRED Y/N	TYPE	CONTINUOUS SPECIAL INSPECTION	PERIODIC SPECIAL INSPECTION	REFERENCED STANDARD	IBC REFERENCE	COMMENTS
Y	1. INSPECT REINFORCEMENT, INCLUDING PRESTRESSING TENDONS, AND VERIFY PLACEMENT.	----	X	ACI 318 CH. 20, 25.2, 25.3, 26.5.1-26.5.3	1908.4	
	2. REINFORCING BAR WELDING:					
Y	a. VERIFY WELDBILITY OF REINFORCING BARS OTHER THAN ASTM A 706.	----	X	AWS D1.4 ACI 318: 26.5.4	----	
Y	b. INSPECT SINGLE-PASS FILLET WELDS, MAXIMUM 5/16"	----	X			
Y	c. INSPECT ALL OTHER WELDS.	X	----			
Y	3. INSPECT ANCHORS CAST IN CONCRETE	----	X	ACI 318: 17.8.2	----	
	4. INSPECTION OF ANCHORS POST-INSTALLED IN HARDENED CONCRETE MEMBERS.					
Y	a. ADHESIVE ANCHORS INSTALLED IN HORIZONTALLY OR UPWARDLY INCLINED ORIENTATIONS TO RESIST SUSTAINED TENSION LOADS.	X	----	ACI 318: 17.8.2.4	----	
Y	b. MECHANICAL ANCHORS AND ADHESIVE ANCHORS NOT DEFINED IN 4.a.	----	X	ACI 318: 17.8.2	----	
Y	5. VERIFY USE OF REQUIRED DESIGN MIX.	----	X	ACI 318: CH.19, 26.4.3, 26.4.4	1904.1, 1904.2, 1908.2, 1908.3	
Y	6. PRIOR TO CONCRETE PLACEMENT, FABRICATE SPECIMENS FOR STRENGTH TESTS, PERFORM SLUMP AND AIR CONTENT TESTS, AND DETERMINE THE TEMPERATURE OF THE CONCRETE.	X	----	ASTM C 172 ASTM C 31 ACI 318: 26.5, 26.12	1908.10	
Y	8. VERIFY MAINTENANCE OF SPECIFIED CURING TEMPERATURE AND TECHNIQUES.	----	X	ACI 318: 26.5.3-26.5.5	1908.9	
Y	9. INSPECT FORMWORK FOR SHAPE, LOCATION AND DIMENSIONS OF THE CONCRETE MEMBER BEING FORMED.	----	X	ACI 318: 26.11.1.2(b)	----	

SPECIAL INSPECTIONS AND TESTS OF SOILS

SPECIAL INSPECTION REQUIRED Y/N	VERIFICATION AND INSPECTION TASK	FREQUENCY OF INSPECTION: CONTINUOUS DURING TASK LISTED	FREQUENCY OF INSPECTION: PERIODICALLY DURING TASK LISTED	REFERENCE FOR CRITERIA: IBC SECTION	COMMENTS
Y	1. VERIFY MATERIALS BELOW SHALLOW FOUNDATIONS ARE ADEQUATE TO ACHIEVE THE DESIGN BEARING CAPACITY.	----	X	1705.6	
Y	2. VERIFY EXCAVATIONS ARE EXTENDED TO PROPER DEPTH AND HAVE REACHED PROPER MATERIAL.	----	X	1705.6	
Y	3. PERFORM CLASSIFICATION AND TESTING OF COMPACTED FILL MATERIALS.	----	X	1705.6	
Y	4. VERIFY USE OF PROPER MATERIALS, DENSITIES AND LIFT THICKNESS DURING PLACEMENT AND COMPACTION OF COMPACTED FILL.	X	----	1705.6	
Y	5. PRIOR TO PLACEMENT OF COMPACTED FILL, INSPECT SUBGRADE AND VERIFY THAT THE SITE HAS BEEN PREPARED PROPERLY.	----	X	1705.6	

SPECIAL INSPECTION AND VERIFICATION OF COLD-FORMED STEEL DECK

SPECIAL INSPECTION REQUIRED Y/N	VERIFICATION AND INSPECTION TASK	TYPE OF INSPECTION: QUALITY CONTROL TASK	TYPE OF INSPECTION: QUALITY ASSURANCE TASK	REFERENCED STANDARD	COMMENTS
	1. INSPECTION OR EXECUTION TASKS PRIOR TO DECK PLACEMENT:				
Y	a. VERIFY COMPLIANCE OF MATERIALS (DECK AND ALL DECK ACCESSORIES) WITH CONSTRUCTION DOCUMENTS, INCLUDING PROFILES , MATERIAL PROPERTIES, AND BASE MATERIAL THICKNESS.	P	P	SDI-ANSI-QA-QC-2011 TABLE 1.1	
Y	b. DOCUMENT ACCEPTANCE OR REJECTION OF DECK AND DECK ACCESSORIES.	P	P		
	2. INSPECTION OR EXECUTION TASKS AFTER DECK PLACEMENT:				
Y	a. VERIFY COMPLIANCE OF DECK AND ALL DECK ACCESSORIES INSTALLATION WITH CONSTRUCTION DOCUMENTS.	P	P	SDI-ANSI-QA-QC-2011 TABLE 1.2	
Y	b. VERIFY DECK MATERIALS ARE REPRESENTED BY MILL CERTIFICATIONS THAT COMPLY WITH THE CONSTRUCTION DOCUMENTS.	----	P		
Y	c. DOCUMENT ACCEPTANCE OR REJECTION OF INSTALLATION OF DECK AND DECK ACCESSORIES.	P	P		
	3. INSPECTION OR EXECUTION TASKS PRIOR TO WELDING:				
Y	a. WELDING PROCEDURE SPECIFICATIONS (WPS) AVAILABLE.	O	O	SDI-ANSI-QA-QC-2011 TABLE 1.3	
Y	b. MANUFACTURER CERTIFICATIONS FOR WELDING CONSUMABLES AVAILABLE.	O	O		
Y	c. MATERIAL IDENTIFICATION (TYPE/GRADE)	O	O		
Y	d. CHECK WELDING EQUIPMENT.	O	O		
	4. INSPECTION EXECUTION TASKS DURING WELDING:				
Y	a. USE OF QUALIFIED WELDERS	O	O	SDI-ANSI-QA-QC-2011 TABLE 1.4	
Y	b. CONTROL AND HANDLING OF WELDING CONSUMABLES.	O	O		
Y	c. ENVIRONMENT CONDITIONS (WIND SPEED, MOISTURE, TEMPERATURE)	O	O		
Y	d. WPS FOLLOWED	O	O		
	5. INSPECTION OR EXECUTION TASKS AFTER WELDING:				
Y	a. VERIFY SIZE AND LOCATION OF WELDS, INCLUDING SUPPORT, SIDELAP, AND PERIMETER WELDS.	P	P	SDI-ANSI-QA-QC-2011 TABLE 1.5	
Y	a. WELDS MEET VISUAL ACCEPTANCE CRITERIA.	P	P		
Y	a. VERIFY REPAIR ACTIVITIES.	P	P		
Y	a. DOCUMENT ACCEPTANCE OR REJECTION OR WELDS.	P	P		
	6. INSPECTION OR EXECUTION TASKS PRIOR TO MECHANICAL FASTENING:				
Y	a. MANUFACTURER INSTALLATION INSTRUCTIONS AVAILABLE FOR MECHANICAL FASTENERS.	O	O	SDI-ANSI-QA-QC-2011 TABLE 1.6	
Y	b. PROPER TOOLS AVAILABLE FOR FASTENER INSTALLATION.	O	O		
Y	c. PROPER STORAGE FOR MECHANICAL FASTENERS.	O	O.		
	7. INSPECTION OR EXECUTION TASKS DURING TO MECHANICAL FASTENING:				
Y	a. FASTENERS ARE POSITIONED AS REQUIRED.	O	O	SDI-ANSI-QA-QC-2011 TABLE 1.7	
Y	b. FASTENERS ARE INSTALLED IN ACCORDANCE WITH MANUFACTURER'S INSTRUCTIONS.	O	O		
	8. INSPECTION OR EXECUTION TASKS AFTER MECHANICAL FASTENING:				
Y	a. CHECK SPACING, TYPE, AND INSTALLATION OF SUPPORT FASTENERS.	P	P	SDI-ANSI-QA-QC-2011 TABLE 1.8	
Y	b. CHECK SPACING, TYPE AND INSTALLATION OR SIDELAP FASTENERS.	P	P		
Y	c. CHECK SPACING, TYPE AND INSTALLATION OF PERIMETER FASTENERS.	P	P		
Y	d. VERIFY REPAIR ACTIVITIES.	P	P		
Y	e. DOCUMENT ACCEPTANCE OR REJECTION OF MECHANICAL FASTENERS.	P	P		
N	9. WHERE COLD-FORMED STEEL TRUSS CLEAR SPAN IS 60 FEET OR GREATER, THE SPECIAL INSPECTOR SHALL VERIFY THAT THE TEMPORARY RESTRAINT/BRACING AND THE PERMANENT INDIVIDUAL TRUSS MEMBER RESTRAINT/BRACING ARE INSTALLED IN ACCORDANCE WITH THE APPROVED TRUSS SUBMITTAL PACKAGE.			1705.2.4	

O: ITEMS NEED TO BE OBSERVED ON A INTERMITTENT BASIS. OPERATIONS NEED NOT BE DELAYED PENDING THESE INSPECTIONS. FREQUENCY OF OBSERVATIONS SHALL BE ADEQUATE TO CONFIRM THAT WORK WAS PERFORMED IN ACCORDANCE WITH THE APPLICABLE DOCUMENTS.

P: ITEMS NEED TO BE PERFORMED PRIOR TO FINAL ACCEPTANCE FOR EACH ITEM OR ELEMENT.

WITHIN THE LISTED TASKS, "DOCUMENT" SHALL MEAN THE INSPECTOR SHALL PREPARE, REPORTS OR OTHER APPROPRIATE WRITTEN DOCUMENTATION INDICATING THAT WORK HAS OR HAS NOT BEEN PERFORMED IN ACCORDANCE WITH THE CONSTRUCTION DOCUMENTS.

STONE- HARDIE PANEL OPTION

BRAMIC DESIGN GROUP PLLC
8003 S. GALILEO LN.
TUCSON, AZ 85747
PHONE: (520) 401-9183

COPYRIGHT NOTICE
This drawing is the property of the above referenced Professional and is not to be used for any purpose other than the specific project and site names herein, and cannot be reproduced in any manner without the express written permission from the Professional.

DATE	ISSUE
05.17.24	ISSUED FOR PERMIT REVIEW SET
07.08.24	TITLE BLOCK UPDATE

DATE	REVISION

PROFESSIONAL SEAL

PROFESSIONAL IN CHARGE
JSR

PROJECT MANAGER
GW

QUALITY CONTROL
JSR

DRAWN BY
GS

PROJECT ADDRESS
2920 S. PARK AVE
TUCSON ARIZONA 85713

VALVOLINE INSTANT OIL CHANGE

BDG PROJECT NUMBER
23-849

SHEET NAME
SPECIAL INSPECTIONS

SHEET #
S1.1

ennovative.

Unsealed drawings shall be considered preliminary designs and shall not be used for construction or final bidding.

These drawings are copyrighted by ennovative. LLC. Drawings shall not be reused or reproduced, whole or in part, without the written consent of ennovative. LLC. ©

JOB: 23073

SPECIAL INSPECTION

SPECIAL INSPECTION AND VERIFICATION OF STEEL CONSTRUCTION

SPECIAL INSPECTION REQUIRED Y/N	VERIFICATION AND INSPECTION TASK	TYPE OF INSPECTION: QUALITY CONTROL TASK	TYPE OF INSPECTION: QUALLITY ASSURANCE TASK	REFERENCED STANDARD	COMMENTS
	1. INSPECTION TASKS PRIOR TO WELDING:			AISC 360 TABLE N5.4-1	
Y	a. WELDING PROCEDURE SPECIFICATIONS (WPSs) AVAILABLE.	P	P		
Y	b. MANUFACTURER CERTIFICATIONS FOR WELDING CONSUMABLES AVAILABLE.	P	P		
Y	c. MATERIAL IDENTIFICATION (TYPE/GRADE).	O	O		
Y	d. WELDER IDENTIFICATION SYSTEM.	O	O		
Y	e. FIT-UP OF GROOVE WELDS (INCLUDING JOINT GEOMETRY).	O	O		
	1) JOINT PREPARATION.				
	2) DIMENSIONS (ALIGNMENT, ROOT FACE, BEVEL)				
	3) CLEANLINESS (CONDITION OF STEEL SURFACES)				
	4) TACKING (TACK WELD QUALITY AND LOCATION)				
	5) BACKING TYPE AND FIT (IF APPLICABLE)				
Y	f. CONFIGURATION AND FINISH OF ACCESS HOLES.	O	O		
Y	g. FIT-UP OF FILLET WELDS.	O	O		
	1) DIMENSIONS (ALIGNMENT, GAPS AT ROOT)				
	2) CLEANLINESS (CONDITION OF STEEL SURFACES)				
	3) TACKING (TACK WELD QUALITY AND LOCATION)				
Y	h. CHECK WELDING EQUIPMENT.	O	----		
	2. INSPECTION TASKS DURING WELDING:			AISC 360 TABLE N5.4-2	
Y	a. USE OF QUALIFIED WELDERS.	O	O		
Y	b. CONTROL AND HANDLING OF WELDING CONSUMABLES.	O	O		
	1) PACKAGING				
	2) EXPOSURE CONTROL				
Y	c. NO WELDING OVER CRACKED TACK WELDS.	O	O		
Y	d. ENVIRONMENTAL CONDITIONS.	O	O		
	1) WIND SPEED WITHIN LIMITS				
	2) PRECIPITATION AND TEMPERATURE				
Y	e. WPS FOLLOWED.	O	O		
	1) SETTINGS ON WELDING EQUIPMENT.				
	2) TRAVEL SPEED				
	3) SELECTED WELDING MATERIALS				
	4) SHIELDING GAS TYPE/FLOW RATE				
	5) PREHEAT APPLIED				
	6) INTERPASS TEMPERATURE MAINTAINED (MIN/MAX)				
	7) PROPER POSITION (F, V, H, OH)				
Y	f. WELDING TECHNIQUES.	O	O		
	1) INTERPASS AND FINAL CLEANING.				
	2) EACH PASS WITHIN PROFILE LIMITATIONS.				
	3) EACH PASS MEETS QUALITY REQUIREMENTS.				
	3. INSPECTION TASKS AFTER WELDING:			AISC 360 TABLE N5.4-3	
Y	a. WELDS CLEANED.	O	O		
Y	b. SIZE, LENGTH, AND LOCATION OF WELDS.	P	P		
Y	c. WELDS MEET VISUAL ACCEPTANCE CRITERIA.	P	P		
	1) CRACK PROHIBITION				
	2) WELD/BASE-METAL FUSION				
	3) CRATER CROSS SECTION				
	4) WELD PROFILES				
	5) WELD SIZE				
	6) UNDERCUT				
	7) POROSITY				
Y	d. ARC STRIKES.	P	P		
Y	e. k-AREA.	P	P		
Y	f. BACKING REMOVED AND WELD TABS REMOVED (IF REQUIRED).	P	P		
Y	g. REPAIR ACTIVITIES.	P	P		
Y	h. DOCUMENT ACCEPTANCE OR REJECTION OF WELDED JOINT OR MEMBER.	P	P		
	4. INSPECTION TASKS PRIOR TO BOLTING:			AISC 360 TABLE N5.6-1	
Y	a. MANUFACTURER'S CERTIFICATIONS AVAILABLE FOR FASTENER MATERIALS.	O	P		
Y	b. FASTENERS MARKED IN ACCORDANCE WITH ASTM REQUIREMENTS.	O	O		
Y	c. PROPER FASTENERS SELECTED FOR THE JOINT DETAIL.	O	O		
	1) GRADE				
	2) TYPE				
	3) BOLT LENGTH IF THREADS ARE TO BE EXCLUDED FROM SHEAR PLANE				
Y	d. CONNECTING ELEMENTS, INCLUDING THE APPROPRIATE FAYING SURFACE CONDITION AND HOLE PREPARATION, IF SPECIFIED, MEET APPLICABLE REQUIREMENTS.	O	O		
Y	e. PRE-INSTALLATION VERIFICATION TESTING BY INSTALLATION PERSONNEL OBSERVED AND DOCUMENTED FOR FASTENER ASSEMBLIES AND METHODS USED.	P	O		
Y	f. PROPER STORAGE PROVIDED FOR BOLTS, NUTS, WASHERS, AND OTHER FASTENER COMPONENTS.	O	O		
	5. INSPECTION TASKS DURING BOLTING:			AISC 360 TABLE N5.6-2	
Y	a. FASTENER ASSEMBLIES, OF SUITABLE CONDITION, PLACED IN ALL HOLES AND WASHERS (IF REQUIRED) ARE POSITIONED AS REQUIRED.	O	O		
Y	b. JOINT BROUGHT TO THE SNUG-TIGHT CONDITION PRIOR TO THE PRETENSIONING OPERATION.	O	O		
Y	c. FASTENER COMPONENT NOT TURNED BY THE WRENCH PREVENTED FROM ROTATING.	O	O		
Y	d. FASTENERS ARE PRETENSIONED IN ACCORDANCE WITH THE RCSC SPECIFICATION, PROGRESSING SYSTEMATICALLY FROM THE MOST RIGID POINT TOWARD THE FREE EDGES.	O	O		
	6. INSPECTION TASKS AFTER BOLTING:			AISC 360 TABLE N5.6-3	
Y	a. DOCUMENT ACCEPTANCE OR REJECTION OF BOLTED CONNECTIONS.	P	P		
	7. INSPECTION OF STEEL ELEMENTS OF COMPOSITE CONSTRUCTION PRIOR TO PLACEMENT.			AISC 360 TABLE N6.1	
Y	a. PLACEMENT AND INSTALLATION OF STEEL DECK.	P	P		
Y	b. PLACEMENT AND INSTALLATION OF STEEL HEADED STUD ANCHORS.	P	P		
Y	c. DOCUMENT ACCEPTANCE OR REJECTION OF STEEL ELEMENTS.	P	P		
	8. INSPECTION OF ANCHOR ROD PLACEMENT AND PLACEMENT OF EMBEDDED ITEMS.			AISC 360 SECTION N5.7	
Y	a. DIAMETER, GRADE, TYPE, AND LENGTH OF ANCHOR ROD OR EMBEDDED ITEM.	P	P		
Y	b. EXTENT OR DEPTH OF EMBEDMENT INTO CONCRETE.	P	P		
Y	9. INSPECTION OF THE FABRICATED STEEL OR ERECTED STEEL FRAME TO VERIFY COMPLIANCE WITH THE DETAILS SHOWN ON THE CONSTRUCTION DOCUMENTS.	P	P	AISC 360 SECTION N5.7	
O: ITEMS NEED TO BE OBSERVED ON A RANDOM BASIS. OPERATIONS NEED NOT BE DELAYED PENDING THESE INSPECTIONS.					
P: ITEMS NEED TO BE PERFORMED FOR EACH WELD JOINT OR MEMBER.					

BRAMIC DESIGN GROUP PLLC
8003 S. GALILEO LN.
TUCSON, AZ 85747
PHONE: (520) 401-9183

COPYRIGHT NOTICE
This drawing is the property of the above referenced Professional and is not to be used for any purpose other than the specific project and site names herein, and cannot be reproduced in any manner without the express written permission from the Professional.

DATE	ISSUE
05.17.24	ISSUED FOR PERMIT REVIEW SET
07.08.24	TITLE BLOCK UPDATE

DATE	REVISION

PROFESSIONAL SEAL

PROFESSIONAL IN CHARGE
JSR

PROJECT MANAGER
GW

QUALITY CONTROL
JSR

DRAWN BY
GS

PROJECT ADDRESS
2920 S. PARK AVE
TUCSON ARIZONA 85713

VALVOLINE INSTANT OIL CHANGE

BDG PROJECT NUMBER
23-849

SHEET NAME
SPECIAL INSPECTIONS

SHEET #
S1.2

ennovative.

Unsealed drawings shall be considered preliminary designs and shall not be used for construction or final bidding.

These drawings are copyrighted by ennovative. LLC. Drawings shall not be reused or reproduced, whole or in part, without the written consent of ennovative. LLC. ©

JOB: 23073

STONE- HARDIE PANEL OPTION

NOTES:

1. CONCRETE FOUNDATION.
2. DO NOT LOCATE BOTTOM OF ADJACENT FOOTING BELOW LINE EXTENDING FROM BOTTOM OF UPPER FOOTING.
3. 45° MAX IN GRANULAR SOILS, 45° MAX IN OTHER SOILS, U.N.O.

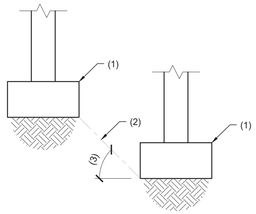

TYPICAL NOTES:

- SEE G.S.N., PLANS, DETAILS AND GEOTECHNICAL REPORT FOR ADDITIONAL INFORMATION.

01 TYPICAL MAXIMUM SLOPE BETWEEN ADJACENT FOOTING
SCALE: NTS

NOTES:

1. 30° MAX IN GRANULAR SOILS 45° MAX IN OTHER SOILS U.N.O.
2. BOTTOM OF CONCRETE FOUNDATION.
3. BOTTOM OF TRENCH.
4. FINISHED GRADE.
5. DO NOT EXCAVATE A TRENCH BELOW IMAGINARY LINE EXTENDING FROM BOTTOM OF FOUNDATION.
6. PIPE OR CONDUIT.

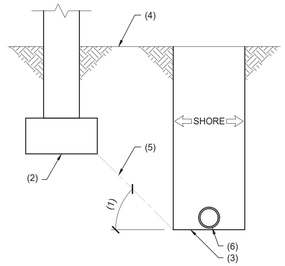

02 TYPICAL TRENCH PARALLEL TO FOUNDATION
SCALE: NTS

NOTES:

1. CONCRETE SLAB, REINFORCING PER PLANS.
2. SOIL PER G.S.N. AND GEOTECHNICAL REPORT.
3. PIPE OR CONDUIT WITH SLEEVE.
4. #4 AT 12" O.C.

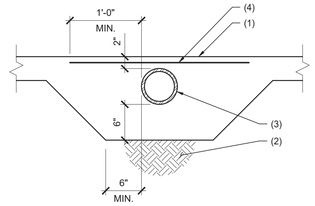

03 TYPICAL SLEEVE FOR PIPE AT SLAB
SCALE: NTS

NOTES:

1. CONCRETE FOOTING, NO SLEEVES PERMITTED THROUGH FOOTING.
2. 3'-0" MAX., STEP FOOTING AS NEEDED TO MAINTAIN MAX. HEIGHT.
3. EXCAVATION BELOW THESE LINES NOT PERMITTED.
4. CAST IRON SLEEVE, 2" LARGER THAN PIPE.
5. STEM WALL.
6. CONCRETE FILLED PIPE TRENCH, EXTEND 2'-0" EACH SIDE OF SLEEVE. CONCRETE FILL TO BE PLACED BEFORE FOOTING IS POURED.
7. BACKFILL PER SPECS.
8. 90% DENSITY (ASTM D-698).
9. PIPE SLEEVE, MIN. 1/2" CLEARANCE AROUND PIPE OR CONDUIT.
10. PIPE OR CONDUIT.

TYPICAL NOTES:

- PIPES MAY NOT PASS THROUGH FOOTINGS OR UNDER COLUMN FOOTINGS.
- FOR TRENCHES GREATER THAN 3'-0" BELOW BOTTOM OF FOOTING, SEE TYPICAL PIPE PASSING BELOW WALL FOOTING DETAIL.
- PIPES LOCATED GREATER THAN 3'-0" BELOW FOOTING BASE MAY BE BACKFILLED WITH COMPACTED FILL PER SPECIFICATIONS, IN LIEU OF CONCRETE FILL.

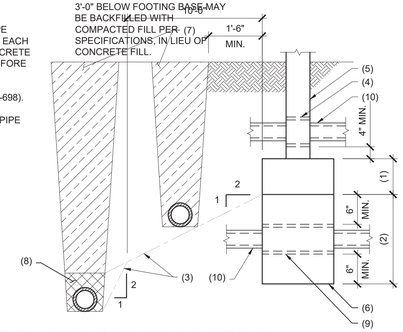

04 TYPICAL PIPE THROUGH FOUNDATION WALL AND TRENCH
SCALE: NTS

NOTES:

1. STEM WALL.
2. CONCRETE FOOTING.
3. 1'-6" MAX. NOTIFY STRUCTURAL ENGINEER IF WIDTH EXCEEDS 1'-6" PRIOR TO PLACEMENT OF FOOTING.
4. BACKFILL AND RE-COMPACT TRENCH PER GEOTECHNICAL REPORT AND SPECIFICATIONS.
5. PIPE OR CONDUIT.
6. 3'-1" OR GREATER.

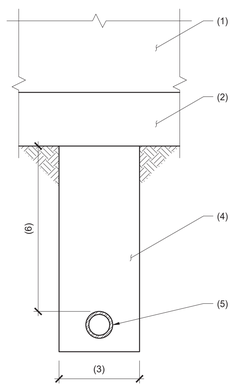

TYPICAL NOTES:

- NO PIPE SHALL PASS THROUGH FOUNDATION OR UNDER COLUMN FOOTINGS.

05 TYPICAL PIPE PASSING BELOW WALL FOOTING IN DEEP TRENCH
SCALE: NTS

NOTES:

1. CONCRETE.
2. KEYED JOINT, REMOVE FORM MATERIAL PRIOR TO PLACING ADJACENT CONCRETE.

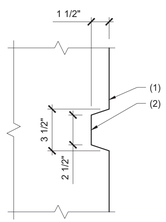

TYPICAL NOTES:

ALL DIMENSIONS ARE ± 1/2".

06 TYPICAL KEY IN CONCRETE
SCALE: NTS

NOTES:

1. CONCRETE SLAB ON GRADE.
2. SAWCUT 1/8" WIDE X 1/4 SLAB THICKNESS DEEP. CUT SHALL BE MADE SOON ENOUGH TO PREVENT SHRINKAGE CRACKING, BUT NOT SO SOON AS TO CAUSE SPALLING OF THE CONCRETE WHILE SAWING. WORK MUST BE ACCOMPLISHED WITHIN 24 HOURS OF CONCRETE PLACEMENT.
3. CONTINUOUS KEY, SEE TYPICAL KEY IN CONCRETE DETAIL.

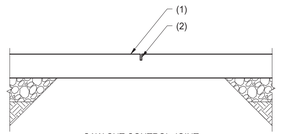

SAW CUT CONTROL JOINT

GENERAL NOTES:

- TOOL WET JOINT", "ZIP STRIP", MAY BE USED IN LIEU OF SAWCUT JOINT AND SHALL MATCH SAWCUT REQUIREMENTS.
- KEYED JOINTS NEED ONLY OCCUR AT EXPOSED EDGES DURING PLACEMENT UNLESS SPECIFICALLY NOTED ON THE PLANS

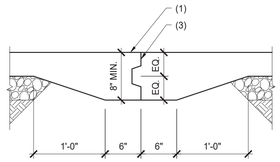

KEYED CONSTRUCTION JOINT

07 TYPICAL JOINTS IN CONCRETE SLAB ON GRADE
SCALE: NTS

NOTES:

1. DRILLED HOLE DIAMETER MAY NOT EXCEED 1/3 OF THE JOIST/BEAM DEPTH.
2. DRILLED HOLES ARE PERMITTED ONLY IN THE HATCHED AREA.
3. WOOD JOIST OR BEAM.
4. WOOD STUD.
5. DRILLED HOLE DIAMETER MAY NOT EXCEED 40% OF THE STUD WIDTH.

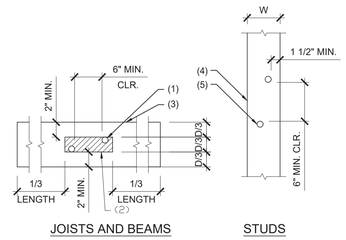

TYPICAL NOTES:

- THIS DETAIL APPLIES TO SOLID SAWN LUMBER ONLY.
- CONTACT ENGINEER IF CONDITIONS EXCEED THOSE SHOWN.
- AT JOIST AND BEAMS, HOLES ARE PERMITTED ONLY IN THE MIDDLE THIRD OF THE MEMBER CLEAR SPAN.
- BORED HOLES SHALL NOT BE LOCATED IN THE SAME CROSS SECTION OF CUT OR NOTCH.
- DRILLED HOLES IN WOOD STUDS MAY BE INCREASED TO 60 PERCENT OF THE STUD WIDTH FOR EITHER OF THE FOLLOWING:
  a. THE WALL IS NON-LOAD BEARING
  b. THE STUDS ARE DOUBLED UP AND NO MORE THAN TWO SUCCESSIVE PAIRS OF DOUBLED UP STUDS ARE DRILLED THROUGH.

08 TYPICAL DRILLED HOLES IN SOLID SAWN WOOD FRAMING
SCALE: NTS

BAR #	f'c = 2500/3000 PSI				f'c = 4000 PSI				f'c = 5000 PSI			
	TOP BARS		OTHER BARS		TOP BARS		OTHER BARS		TOP BARS		OTHER BARS	
	CASE 1	CASE 2	CASE 1	CASE 2	CASE 1	CASE 2	CASE 1	CASE 2	CASE 1	CASE 2	CASE 1	CASE 2
#3	28	42	22	32	24	36	19	28	22	33	17	25
#4	37	56	29	43	32	48	25	37	29	43	22	33
#5	47	70	36	54	40	60	31	47	36	54	28	42
#6	56	84	43	64	48	72	37	56	43	65	33	50
#7	81	122	63	94	70	106	54	81	63	94	49	73
#8	93	139	72	107	80	121	62	93	72	108	55	83
#9	105	157	81	121	91	136	70	105	81	122	63	94
#10	118	177	91	136	102	153	79	118	91	137	70	105
#11	131	196	101	151	113	170	87	131	101	152	78	117

GENERAL NOTES:

- VALUES ARE BASED ON GRADE 60 REINFORCING BARS AND NORMAL WEIGHT CONCRETE.
- LENGTHS ARE IN INCHES.
- TENSION SPLICE LENGTHS ARE FOR CLASS B LAP SPLICES.
- TENSION DEVELOPMENT LENGTH = SPLICE LENGTH / 1.3
- TOP BARS ARE HORIZONTAL BARS WITH MORE THAN 12 INCHES OF CONCRETE CAST BELOW THE BARS.
- FOR LIGHTWEIGHT AGGREGATE CONCRETE, MULTIPLY THE TABULATED VALUES BY 1.3.
- CASES 1 AND 2 ARE DEFINED AS:

BEAMS AND COLUMNS WITH TIES	CASE 1	COVER AT LEAST $1d_b$ AND C.C. SPACING AT LEAST $2d_b$
	CASE 2	COVER LESS THAN $1d_b$ OR C.C. SPACING LESS THAN $2d_b$
ALL OTHERS	CASE 1	COVER AT LEAST $1d_b$ AND C.C. SPACING AT LEAST $3d_b$
	CASE 2	COVER LESS THAN $1d_b$ OR C.C. SPACING LESS THAN $3d_b$

- FOR EPOXY-COATED BARS, MULTIPLY THE TABULATED VALUES BY ONE OF THE FOLLOWING FACTORS:

CONCRETE COVER AND SPACING	TOP BARS	OTHER BARS
COVER < 3db OR CLEAR SPACING < 6db	1.31	1.5
COVER ≥ 3db OR CLEAR SPACING ≥ 6db	1.2	1.2

09 TYPICAL MINIMUM REINFORCING BAR SPLICE LENGTHS IN CONCRETE
SCALE: NTS

BAR #	D (in.)	180° HOOKS		90° HOOKS
		A or G	J	A or G
#3	2.5	5	3	6
#4	3	6	4	8
#5	3.75	7	5	10
#6	4.5	8	6	12
#7	5.25	10	7	14
#8	6	11	8	16
#9	9.5	15	11.75	19
#10	10.75	17	13.25	22
#11	12	19	13.75	24

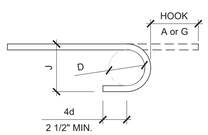

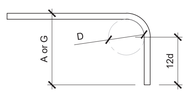

10 TYPICAL REINFORCING HOOK SCHEDULE
SCALE: NTS

NOTES:

1. CONCRETE STEM WALL OR FOOTING.
2. REINFORCING PER PLANS AND G.S.N.
3. CORNER BARS SHALL MATCH SIZE AND SPACING AS HORIZONTAL REINFORCING. LAP PER G.S.N. AND TYPICAL DETAILS.
4. ALTERNATE BEND.

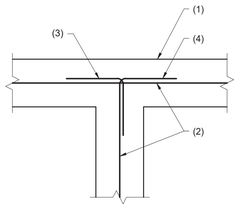

INTERSECTION

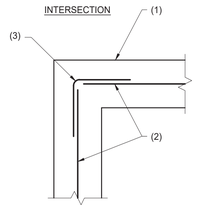

CORNER

11 TYPICAL CORNER REINFORCING IN CONCRETE FOOTING/STEM WALL
SCALE: NTS

STONE- HARDIE PANEL OPTION

BRAMIC DESIGN GROUP PLLC
8003 S. GALILEO LN.
TUCSON, AZ 85747
PHONE: (520) 401-9183

COPYRIGHT NOTICE
This drawing is the property of the above referenced Professional and is not to be used for any purpose other than the specific project and site names herein, and cannot be reproduced in any manner without the express written permission from the Professional.

DATE	ISSUE
05.17.24	ISSUED FOR PERMIT REVIEW SET
07.08.24	TITLE BLOCK UPDATE

DATE	REVISION

PROFESSIONAL SEAL

PROFESSIONAL IN CHARGE
JSR

PROJECT MANAGER
GW

QUALITY CONTROL
JSR

DRAWN BY
GS

PROJECT ADDRESS
2920 S. PARK AVE
TUCSON ARIZONA 85713

Valvoline Instant Oil Change
VALVOLINE INSTANT OIL CHANGE

ennovative.
Unsealed drawings shall be considered preliminary designs and shall not be used for construction or final bidding.

These drawings are copyrighted by ennovative. LLC. Drawings shall not be reused or reproduced, whole or in part, without the written consent of ennovative. LLC. ©
JOB: 23073

BDG PROJECT NUMBER
23-849

SHEET NAME
TYPICAL DETAILS

SHEET #
S1.3

NOTES:

1. LAP - SEE G.S.N. AND TYPICAL DETAILS.
2. MAX 1/5 LAP BUT NOT MORE THAN 6".
3. 1d (1" MINIMUM).
4. WIRE TIES.
5. 135 DEGREE BEND.
6. #3 BARS: BEND AROUND 1 1/2" PIN. #4 BARS: BEND AROUND 2" PIN. #5 BARS: BEND AROUND 2 1/2" PIN.
7. 6d.
8. 180 DEGREE HOOK.
9. #8 AND SMALLER: RADIUS = 3d #9 - #11: RADIUS = 4d #14, #18: RADIUS = 5d GRADE 40 BARS WITH 180 DEGREE HOOK: RADIUS = 5d

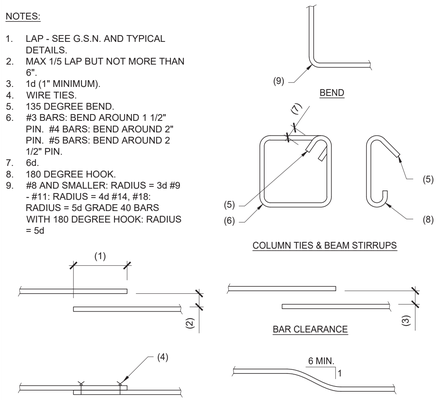

12 TYPICAL CONCRETE REINFORCING BAR DETAILS
SCALE: NTS

NOTES:

1. CONCRETE FOOTING.
2. REINFORCING PER FOOTING SCHEDULE.
3. LAP SPLICE PER GENERAL STRUCTURAL NOTES.
4. FOOTING DOWEL - MATCH SIZE AND SPACING OF VERTICAL WALL REINFORCING. LAP PER GENERAL STRUCTURAL NOTES.

TYPICAL NOTES:

- THIS DETAIL SHALL BE USED AS REQUIRED TO MAINTAIN FOOTING DEPTHS SHOWN ON PLANS OR DETAILS AND MAY NOT BE SPECIFICALLY REFERENCED. REINFORCING PER FOOTING SCHEDULE.
- SEE PLANS FOOTING SIZES AND REINFORCING.
- BOTTOM OF FOOTING SHALL BE STEPPED - BOTTOM OF FOOTING SHALL NOT BE SLOPED.

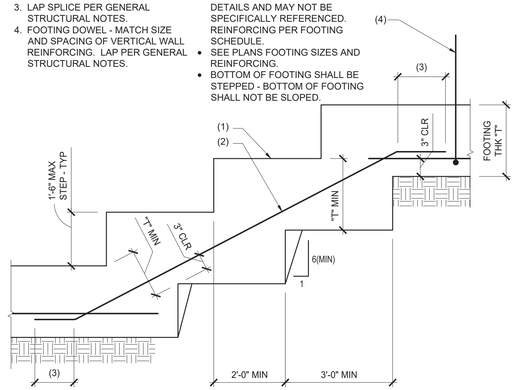

13 TYPICAL STEPPED FOOTING DETAIL
SCALE: NTS

NOTES:

1. COLD JOINT - ROUGHEN SURFACE TO 1/4" MINIMUM DEPTH. CLEAN SURFACE AND PRE-WET PRIOR TO SECOND POUR.
2. #4 X 12" DOWELS AT 24" O.C. WITH STD. 90 DEGREE HOOK AT EACH END. LOCATE (2) BARS WITHIN 2'-0" OF CORNER (4 BARS TOTAL AT CORNER, 2 EACH SIDE OF CORNER). EMBED DOWEL 6" (CENTER DOWEL ON COLD JOINT.

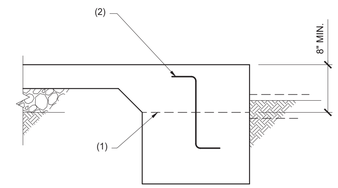

14 OPTIONAL COLD JOINT AT FOOTING
SCALE: NTS

NOTES:

1. BEAM PER PLAN.
2. 7 WELDS @ PLB-36V UNIT.

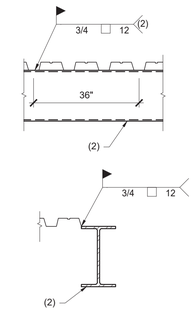

WELDING AT ALL BEARINGS PERPENDICULAR TO FLUTES

NOTE:

- ALL 3/4" DIA. PLUG WELD SHALL BE 1/2" DIA. EFFECTIVE
- PLB-36: TOP SEAM WELD AT 12" O.C.

15 METAL DECKING WELDING
SCALE: NTS

NOTES:

1. 2" MIN LAP REQ'D FOR BEAM FLANGES LESS THAN 2" IN WIDTH.
2. END AND INTERMEDIATE SUPPORT WELD.
3. LONGITUDINAL SUPPORT WELD.
4. SPLICE JOINT.
5. STEEL BEAM PER PLAN.
6. 2" MIN. BRG, TYP.

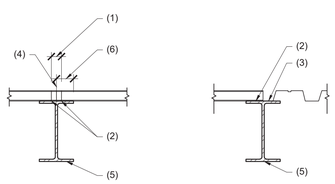

16 METAL DECK SPLICE
SCALE: NTS

NOTES:

1. STEEL DECK.
2. ANGLE SUPPORT 2"x2"x3/16" BELOW DECK - ANGLE MAY BE PLACE ON TOP OF DECK WITH PRIOR APPROVAL OF ARCHITECT.
3. WELD 2" AT EACH RIB -TYPICAL.
4. ANGLE SHALL EXTEND A MINIMUM OF 3 WEBS PAST THE DECK OPENING.

TYPICAL NOTES:

- AN OPENING WHICH CUTS ONE WEB (4" MAX DIMENSION PERPENDICULAR TO RIBS), MAY BE CUT IN DECK WITHOUT ANY SPECIAL REINFORCING.
- AN OPENING WHICH CUTS TWO WEBS (8" MAX DIMENSION PERPENDICULAR TO RIBS), WILL REQUIRE ANGLE SUPPORT SHOWN ABOVE.
- ANY OPENING WHICH CUTS MORE THAN TWO WEBS, FRAME OPENING WITH TYPICAL ANGLE SUPPORT FRAME, SEE TYPICAL OPENING IN STEEL DECK DETAIL.

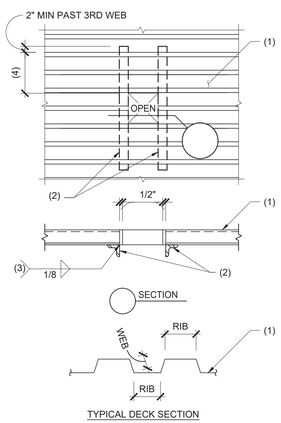

17 TYPICAL SMALL OPENING IN STEEL DECK
SCALE: NTS

NOTES:

1. THE TYPICAL STEEL BEAM TO STEEL COLUMN OR STEEL BEAM TO STEEL BEAM CONNECTION CONSISTS OF 3/8" SINGLE SHEAR PLATES WITH 3/4" DIA. ASTM A325 BOLTS. USE 5/8" SHEAR PLATES WHERE "D" = 27" OR GREATER.
2. ALL BOLTS SHALL BE INSTALLED USING SHORT SLOTTED HOLES IN EITHER THE BEAM WEB OR THE SHEAR PLATE PER LATEST AISC SPECIFICATIONS.
3. CONNECTIONS REQUIRING DOUBLE ANGLES OR BENT PLATES WILL BE MARKED ON THE PLANS WITH AN ASTERISK (*). ALL DOUBLE ANGLES SHALL BE L4x4x1/4 AND ALL BENT PLATES SHALL BE 1/4" THICK - DETAIL PER THE LATEST AISC STEEL CONSTRUCTION MANUAL.

NOMINAL BEAM DEPTH "D"	NUMBER OF 3/4" DIA. ASTM, A325 BOLTS
UP TO 7"	2 ••
8" - 11"	2 •
12" - 14"	3
15" - 17"	4
18" - 20"	5
21" - 23"	6
24" - 29"	7
30" - 32"	8
33" - 35"	9
36"	10

18 TYPICAL BOLT SCHEDULE FOR STEEL CONNECTIONS
SCALE: NTS

NOTES:

1. 2" MINIMUM.
2. EMBEDMENT.
3. FACE OF CONCRETE OR MASONRY.
4. PLATE, ANGLE, CHANNEL, ETC. THICKNESS OF DRYPACK DOES NOT APPLY TOWARDS EMBEDMENT.

ANCHOR DIAMETER	VERTICAL BOLT EMBEDMEN LENGTH	HORIZONTAL BOLT EMBEDMENT LENGTH	HEADED STUD FILLET WELD SIZE, "S"
1/2"	7"	4"	1/4"
5/8"	7"	4"	5/16"
3/4"	7"	5"	5/16"
7/8"	8"	6"	5/16"
1"	9"	7"	3/8"
1 1/8"	10"	8"	---
1 1/4"	11"	9"	---

TYPICAL NOTES:

- PROVIDE ANCHORS PER THIS DETAIL UNLESS NOTED OTHERWISE ON PLANS OR DETAILS.
- HEADED STUDS MAY BE AUTOMATICALLY WELDED IN LIEU OF FILLET WELDS SHOWN.

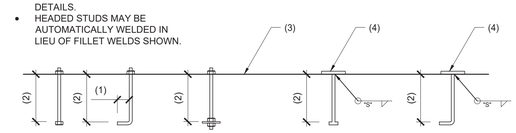

19 TYPICAL CAST IN PLACE ANCHORS
SCALE: NTS

NOTES:

1. 2" MIN PAST THE DECK OPENING.
2. ANGLE SHALL EXTEND A MINIMUM OF 3 WEBS PAST THE DECK OPENING.

NOTES:

1. PLATE, ANGLE, CHANNEL, ETC. THICKNESS OF DRYPACK DOES NOT APPLY TOWARDS EMBEDMENT.
2. EMBEDMENT.
3. FACE OF CONCRETE OR MASONRY.

TYPICAL NOTES:

- PROVIDE ANCHORS AND REINFORCING PER THIS DETAIL UNLESS NOTED OTHERWISE ON PLANS OR DETAILS.
- POST-INSTALLED ANCHORS SHALL HAVE CURRENT I.C.C. APPROVAL.
- MECHANICAL ANCHORS INCLUDE BUT ARE NOT LIMITED TO WEDGE, UNDERCUT AND SCREW TYPE ANCHORS.
- ADHESIVE ANCHORS INCLUDE BOTH THREADED ROD AND REINFORCING STEEL.

ANCHOR DIAMETER	MECHANICAL ANCHOR EMBEDMENT LENGTH		ADHESIVE ANCHORS EMBEDMENT LENGTH	
	CONCRETE	MASONRY	CONCRETE	MASONRY
3/8"	3"	2 3/4"	4 1/2"	3 1/2"
1/2"	4"	3 1/2"	5"	4 1/2"
5/8"	5 1/4"	4 1/2"	6 3/4"	6"
3/4"	5 3/4"	5 1/2"	6 3/4"	7"
7/8"	---	---	7"	---
1"	8"	8"	8"	---
1 1/4"	---	---	10"	---

REINFORCING STEEL SIZE	ADHESIVE ANCHORS EMBEDMENT LENGTH	
	CONCRETE	MASONRY
#3	3"	6"
#4	6"	8"
#5	6"	8"
#6	8"	8"
#7	8"	8"
#8	10"	8"
#9	12"	12"

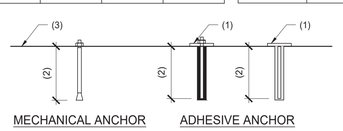

20 TYPICAL POST-INSTALLED ANCHORS/REINFORCING STEEL
SCALE: NTS

NOTES:

1. CRIPPLE SHEARWALL, BLOCKING AND STRAP BY OTHERS.
2. SEE 6/WSWH2 FOR TOP CONNECTION.
3. FULL-HEIGHT ADJACENT FRAMING BY OTHERS.
4. STRONG-WALL HIGH STRENGTHWOOD SHEARWALL.

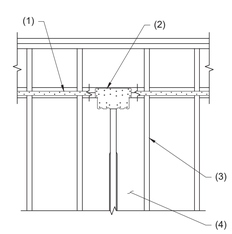

21 TOP OF STRONG WALL HEIGHT ADJUSTMENTS
SCALE: NTS

NOTES:

1. TOLERANCES ARE SPECIFIED IN ASTM F1667. TYPICAL SHAPE OF COMMON, BOX, AND SINKER STEEL WIRE NAILS SHOWN. SEE ASTM F1667 FOR OTHER NAIL TYPES.
2. IT IS PERMITTED TO ASSUME THE LENGTH OF THE TAPERED TIP IS 2D.

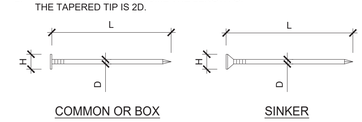

GENERAL NOTES:

- D = DIAMETER, IN.
- L = LENGTH, IN.
- H = HEAD DIAMETER, IN.

TYPE		6d	7d	8d	10d	12d	16d	20d	30d
COMMON	L	2	2 1/4	2 1/2	3	3 1/4	3 1/2	4	4 1/2
	D	0.113	0.113	0.131	0.148	0.148	0.162	0.192	0.207
	H	0.266	0.266	0.281	0.312	0.312	0.344	0.406	0.438
BOX	L	2	2 1/4	2 1/2	3	3 1/4	3 1/2	4	4 1/2
	D	0.099	0.099	0.113	0.128	0.128	0.135	0.148	0.148
	H	0.266	0.266	0.297	0.312	0.312	0.344	0.375	0.375
SINKER	L	1 7/8	2 1/8	2 3/8	2 7/8	3 1/8	3 1/4	3 3/4	4 1/4
	D	0.092	0.099	0.113	0.120	0.135	0.148	0.177	0.192
	H	0.234	0.250	0.266	0.281	0.312	0.344	0.375	0.406

22 STANDARD COMMON, BOX, AND SINKER STEEL WIRE NAILS
SCALE: NTS

BRAMIC DESIGN GROUP PLLC
8003 S. GALILEO LN.
TUCSON, AZ 85747
PHONE: (520) 401-9183

COPYRIGHT NOTICE
This drawing is the property of the above referenced Professional and is not to be used for any purpose other than the specific project and site names herein, and cannot be reproduced in any manner without the express written permission from the Professional.

DATE	ISSUE
05.17.24	ISSUED FOR PERMIT REVIEW SET
07.08.24	TITLE BLOCK UPDATE

DATE	REVISION

PROFESSIONAL SEAL

PROFESSIONAL IN CHARGE
JSR
PROJECT MANAGER
GW
QUALITY CONTROL
JSR
DRAWN BY
GS

PROJECT ADDRESS
2920 S. PARK AVE
TUCSON ARIZONA 85713

VALVOLINE INSTANT OIL CHANGE

BDG PROJECT NUMBER
23-849

SHEET NAME
TYPICAL DETAILS

SHEET #
S1.4

ennovative.
Unsealed drawings shall be considered preliminary designs and shall not be used for construction or final bidding.

These drawings are copyrighted by ennovative. LLC. Drawings shall not be reused or reproduced, whole or in part, without the written consent of ennovative. LLC. ©
JOB: 23073

STONE- HARDIE PANEL OPTION

NOTES:

1. WOOD STUD WALL.
2. WOOD STUD WITH 16d NAILS AT 6" O.C.
3. WOOD STUDS/COLUMN PER HOLDOWN SCHEDULE.
4. SHEATHING.
5. HOLDOWN PER PLAN.
6. EDGE ATTACHMENT.

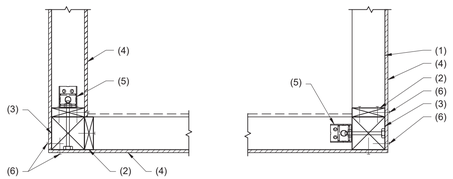

23 TYPICAL HOLDOWN AT WOOD SHEAR WALL AT CORNER
SCALE: NTS

NOTES:

1. 1 1/2" x 1 1/2" x 10 GAGE STEEL RAIL.
2. 1 1/2" x 1 1/2" x 1/2 GAGE STEEL POST AT 4'-0" O.C. MAX.
3. 1" x 1" x 10 GAGE STEEL PICKETS SPACED PER ARCH'L.
4. STEEL BEAM.

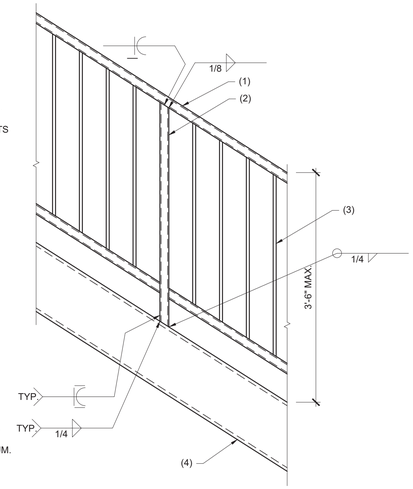

TYPICAL NOTE:

- REFER TO ARCH'L FOR ADD'L INFORMATION.
- SIZES PROVIDED ARE MINIMUM.
- FINAL DESIGN BY STAIR FABRICATOR TO MEET CODE REQUIREMENTS.

24 TYPICAL STAIR RAILING
SCALE: NTS

TYPICAL NOTES:

- OVERCUTTING IS NOT PERMITTED.
- AT EXTERIOR WALLS, CUTS OR NOTCHES ARE NOT PERMITTED.
- "NON-BEARING" WALLS ARE THOSE WHICH SUPPORT ONLY SELF WEIGHT AND NO OTHER LOADS.
- THIS DETAIL APPLIES TO SAWN LUMBER ONLY.
- CONTACT ENGINEER IF CONDITIONS EXCEED THOSE SHOWN.

NOTES:

1. WOOD JOIST
2. WOOD STUD
3. NOTCH IN TOP OR BOTTOM OF JOIST.
4. NOTCH IN STUD.

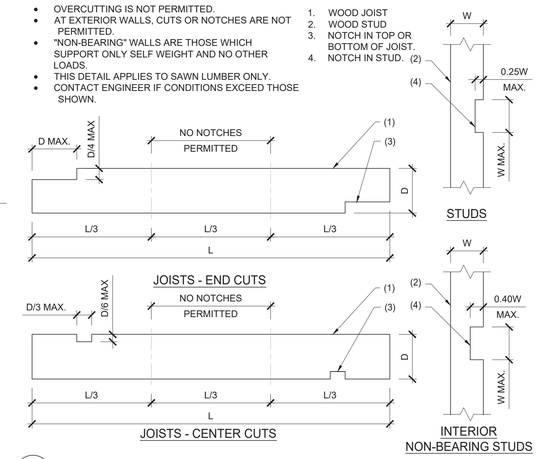

25 TYPICAL NOTCHES IN SOLID SAWN WOOD FRAMING
SCALE: NTS

NOTES:

1. WOOD I-JOIST OR PREFABRICATED WOOD TRUSS. MANUFACTURER SHALL VERIFY CAPACITY FOR MECHANICAL LOADS - MODIFY AS REQUIRED WHILE MAINTAINING DEPTH.
2. (2) 2 X 12 WITH SIMPSON HUS212-2TF HANGERS EACH END AND 16d NAILS AT 12" O.C.
3. TOP FLANGE HANGERS AS REQUIRED PER WOOD I-JOIST OR WOOD TRUSS MANUFACTURER.

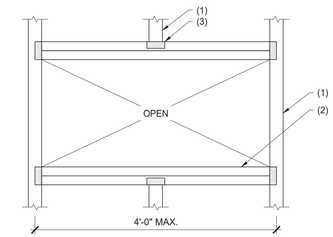

26 TYPICAL WOOD FRAMING AT SMALL ROOF OPENING
SCALE: NTS

NOTES:

1. WOOD JOIST/TRUSS.
2. 2 X 6 WITH SIMPSON TOP FLANGE HANGER - TYPICAL.

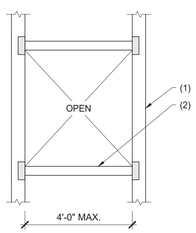

27 TYPICAL WOOD FRAMING AT SMALL ROOF OPENING
SCALE: NTS

NOTES:

1. 2X WOOD STUDS.
2. DOUBLE TOP PLATE.
3. (24) 16d EACH SIDE OF SPLICE - TYP.
4. 16d AT 12" O.C. MAX.

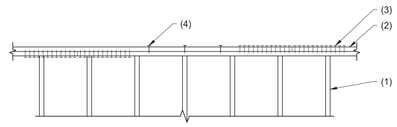

28 TYPICAL WOOD TOP PLATE SPLICE
SCALE: NTS

NOTES:

1. SHEAR WALL SHEATHING AS OCCURS.
2. WOOD STUD WALL.
3. CONTINUOUS WALL STUD EACH SIDE OF INFILL WITH 16d AT SPACING TO MATCH EDGE NAILING SPACING OF SHEAR WALL PER SCHEDULE.
4. (2) 2X STUD INFILL.
5. FLAT 2X STUD, 2" WIDER THAN INTERSECTING WALL.
6. 16d AT 4" O.C. STAGGERED BOTH SIDES.
7. SIMPSON CS16 STRAP X 30" LONG AT TOP PLATE.
8. EDGE ATTACHMENT.

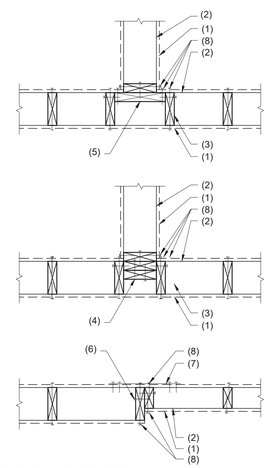

29 PLAN VIEW - INTERSECTING WALL AT CONTINUOUS SHEAR WALL
SCALE: NTS

NOTES:

1. WOOD TRUSS. TRUSS MANUFACTURER SHALL PROVIDE VERTICAL WEB TO MATCH LOCATION OF SHEAR PANEL.
2. 3/8" PLYWOOD SHEAR PANEL WITH 8d AT 6" O.C. EDGE, 12" O.C. FIELD. SHEET ROCK ON OPPOSITE SIDE, COORDINATE WITH ARCHITECTURAL.
3. SHEATHING
4. 2 X AT ALL SIDES AND INTERMEDIATE. MATCH WALL STUD SIZE BELOW.
5. TOP OF WOOD PLATE OR BEAM AS OCCURS.
6. 16d AT 6" O.C. TO TRUSS VERTICAL WEB.
7. 16d TO MATCH EDGE ATTACHMENT U.N.O.

TYPICAL NOTES:

- (1) ROW OF 2" Ø VENTILATION HOLES MAY BE PLACED IN SHEAR PANEL, SPACED NO CLOSER THAN 6" O.C. HORIZONTALLY

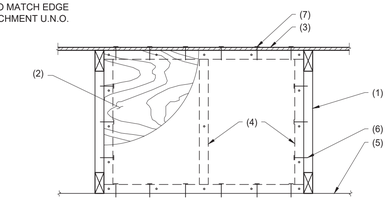

30 TYPICAL PLYWOOD SHEAR PANEL
SCALE: NTS

NOTES:

1. WOOD LINTEL.
2. 2X TRIM STUDS PER LINTEL SCHEDULES.
3. 2X JAMB STUDS PER LINTEL SCHEDULES CONTINUOUS FROM SILL PLATE TO TOP PLATE.
4. 16d NAILS AT 12" O.C. AT BUILT-UP LINTELS (STAGGER NAILS).
5. PROVIDE 1/2" PLYWOOD SPACERS BETWEEN MEMBERS AT BUILT-UP LINTELS.
6. 16d NAILS AT 12" O.C. STUD TO STUD (STAGGER NAILS) - TYPICAL.
7. (4) 16d THROUGH 4X8, 6X6. (6) 16d THROUGH 4x8, 6x8 (8) 16d THROUGH 4X10, 4X12, 6X10, 6X12
8. 16d NAILS.

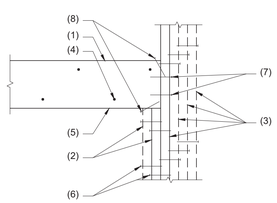

31 TYPICAL WOOD LINTEL
SCALE: NTS

NOTES:

1. JOIST, "I" JOIST OR BOTTOM CHORD OF TRUSS AS OCCURS. PROVIDE 2X WEB FILLER WITH (6) 10d NAILS (CLINCH NAILS) AT CLIP ATTACHMENT TO WOOD I-JOIST WHERE OCCURS.
2. SIMPSON DTC TRUSS CLIP -MAXIMUM SPACING SHALL NOT EXCEED 48" O.C.
3. NON-STRUCTURAL WOOD STUD WALL. - SEE ARCHITECTURAL DRAWINGS.
4. 2 X WOOD PLATE.
5. 2 X 4 BLOCKING AT 48" O.C. WITH (2) 16d NAILS EACH END. PROVIDE 2 X 6 BLOCKING WITH NAILS THROUGH WEB TO BLOCKING AT WOOD I-JOIST.

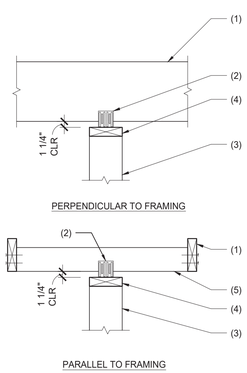

32 TYPICAL CONNECTION OF NON-STRUCTURAL WALLS TO FLOOR OR ROOF FRAMING
SCALE: NTS

NOTES:

1. SHEATHING.
2. CONTINUOUS BOTTOM PLATE.
3. SHEATHING AS OCCURS.
4. STEEL PLATE WASHER AND ANCHOR BOLT.
5. STAGGER ANCHOR BOLTS IN SILL TO MAINTAIN EDGE DISTANCE.
6. STEEL PLATE WASHER SIZE MAY BE INCREASED TO MAINTAIN EDGE DISTANCE IN LIEU OF STAGGERING ANCHOR BOLTS.
7. 1/2" MAX - TYPICAL.

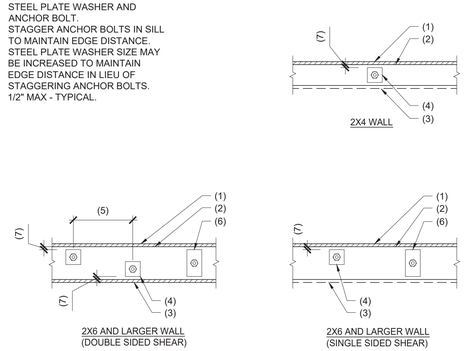

33 PLAN VIEW - ANCHOR BOLT PLATE WASHERS
SCALE: NTS

STONE- HARDIE PANEL OPTION

BRAMIC DESIGN GROUP PLLC
8003 S. GALILEO LN.
TUCSON, AZ 85747
PHONE: (520) 401-9183

COPYRIGHT NOTICE
This drawing is the property of the above referenced Professional and is not to be used for any purpose other than the specific project and site names herein, and cannot be reproduced in any manner without the express written permission from the Professional.

DATE	ISSUE
05.17.24	ISSUED FOR PERMIT REVIEW SET
07.08.24	TITLE BLOCK UPDATE

DATE	REVISION

PROFESSIONAL SEAL

PROFESSIONAL IN CHARGE
JSR

PROJECT MANAGER
GW

QUALITY CONTROL
JSR

DRAWN BY
GS

PROJECT ADDRESS
2920 S. PARK AVE
TUCSON ARIZONA 85713

VALVOLINE INSTANT OIL CHANGE

BDG PROJECT NUMBER
23-849

SHEET NAME
TYPICAL DETAILS

SHEET #
S1.5

ennovative.
Unsealed drawings shall be considered preliminary designs and shall not be used for construction or final bidding.

These drawings are copyrighted by ennovative. LLC. Drawings shall not be reused or reproduced, whole or in part, without the written consent of ennovative. LLC. ©

JOB: 23073

NOTES:

1. 2 X WOOD STUDS AT 16" O.C. MAX.
2. SOLID BLOCKING AT MIDHEIGHT, PLYWOOD SHEATHING PANEL JOINTS AND 5'-0" O.C. MAX.
3. WOOD LINTEL PER TYPICAL DETAILS AND LINTEL SCHEDULE.
4. (2) 16d NAILS STUD TO PLATE, TOP AND BOTTOM, TYPICAL.
5. ANCHOR BOLTS AT TREATED WOOD SILL PLATE ON FOUNDATIONS PER G.S.N. AND SHEAR WALL SCHEDULE.
6. 2 X SILL PLATE U.N.O., USE DOUBLE SILL PLATE WHERE GYPCRETE FLOOR TOPPING OCCURS.
7. SHEAR WALL SHEATHING PER G.S.N. AND SCHEDULES.
8. HOLDOWN WITH ANCHOR PER SHEAR WALL SCHEDULE.
9. TRIMMER STUDS PER LINTEL SCHEDULE AND TYPICAL DETAILS.
10. FULL HEIGHT JAMB/END WALL STUDS SEE LINTEL AND SHEAR WALL SCHEDULES AND TYPICAL DETAILS.
11. CONTINUOUS DOUBLE TOP PLATE WITH 16d NAILS AT 12" O.C. SPLICE WITH (12) 16d NAILS EACH SIDE OF SPLICE MIN. AND PER TYPICAL DETAILS, U.N.O.
12. SIMPSON A34 TYPICAL EACH SIDE OF JAMB STUDS, TOP AND BOTTOM AND AT EACH END OF LINTEL AND SILL AT OPENINGS.
13. SIMPSON FRAMING CLIP AS REQUIRED PER G.S.N.
14. 2 X WOOD SILL. USE DOUBLE 2X SILL AT OPENINGS GREATER THAN 8'-0".

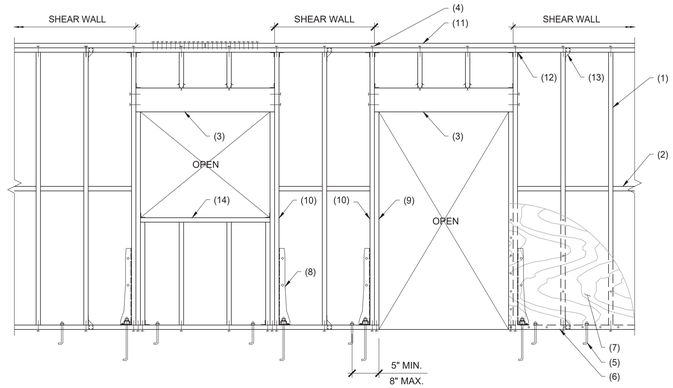

TYPICAL NOTES:

- THIS DETAIL SHALL APPLY TO ALL EXTERIOR, INTERIOR LOAD BEARING AND SHEAR WALLS.
- SEE SHEAR WALL SCHEDULE FOR MINIMUM NUMBER OF FULL HEIGHT END WALL STUDS.

34 TYPICAL WOOD STUD BEARING WALL AND WOOD STUD SHEAR WALL
SCALE: NTS

NOTES:

1. (2) 2x TOP PLATE.
2. 2x WALL STUDS.
3. WOOD BEAM.
4. SIMPSON CMST14 STRAP WITH 0.148x2 1/2" NAILS, END LENGTH = 30" U.N.O.
5. SHEAR WALL SHEATHING.

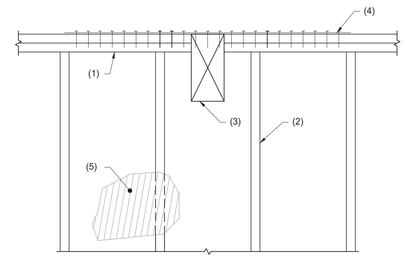

35 DRAG STRAP AT WOOD BEAM
SCALE: NTS

NOTES:

1. STEEL STAIR BEAM.
2. TREADS AND RISERS, SEE ARCHITECTURAL DRAWINGS.
3. STEEL L 1 1/4 X 1 1/4 X 3/16 - STEEL PAN SUPPORT ANGLES.
4. 3/16" CLOSURE PLATE - BUTT WELD ALL AROUND.
5. STEEL L 4 X 3 X 1/4 (SLV) X 0'-3" LONG WITH (1) 3/4" DIA. EXPANSION BOLT.
6. CONCRETE SLAB ON GRADE.
7. 3 SIDES.

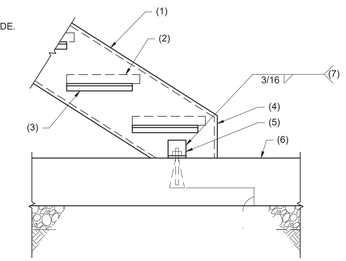

NOTE:

- FOR PRECAST TREAD ATTACHMENT SEE ARCHITECTURAL AND MANUFACTURERS INSTALLATION REQUIREMENTS.

36 STEEL STAIRS AT SLAB ON GRADE
SCALE: NTS

NOTES:

1. STEEL STAIR BEAM.
2. TREADS AND RISERS, SEE ARCHITECTURAL DRAWINGS.
3. STEEL L 1 1/4"x1 1/4"x3/16" - SEEL PAN SUPPORT ANGLES.
4. WELD EACH END OF EACH ANGLE-TYPICAL.

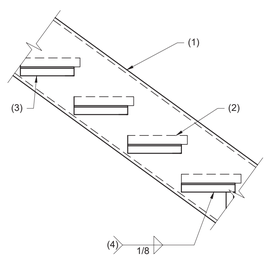

NOTE:

- FOR PRECAST TREAD ATTACHMENT SEE ARCHITECTURAL AND MANUFACTURERS INSTALLATION REQUIREMENTS.

37 TYPICAL STEEL PANS TO STEEL BEAM
SCALE: NTS

NOTES:

1. STEEL STAIR BEAM.
2. STEEL BEAM.
3. CONCRETE OVER STEEL DECK.
4. (2) #4 EDGE REINFORCING - TYPICAL AROUND EDGE OF SLAB.
5. TREADS AND RISERS, SEE ARCHITECTURAL DRAWINGS.
6. L3" X 2" X 3/16" - SEE ARCHITECTURAL PLAN.
7. WELD EACH END OF EACH ANGLE - TYPICAL.

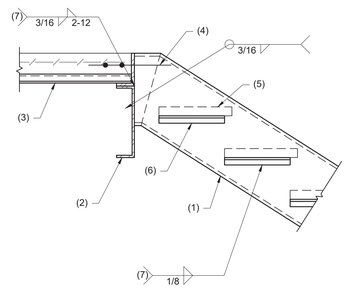

NOTE:

- FOR PRECAST TREAD ATTACHMENT SEE ARCHITECTURAL AND MANUFACTURERS INSTALLATION REQUIREMENTS.

38 STEEL STAIR STRINGER AT STEEL BEAM
SCALE: NTS

NOTES:

1. END WALL STUDS OR JAMB AS OCCURS.
2. HOLDOWN AND ANCHOR PER PLANS.
3. CONTINUOUS 2X BOTTOM PLATE.
4. POST TENSIONED CONCRETE SLAB ON GRADE.
5. BOTTOM OF CONCRETE TURN DOWN.
6. 3" MINIMUM CLEAR BELOW HOLDOWN.
7. SLAB BUMP OUT PER ANCHOR MANUFACTURER FOR MINIMUM CONCRETE EDGE DISTANCE.
8. 10" MAX.
9. EMBEDMENT LENGTH.

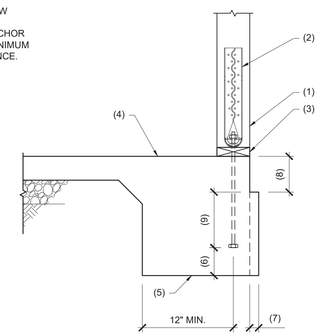

39 TYPICAL HOLDOWN AT EXTERIOR WALL
SCALE: NTS

NOTES:

1. STEEL GUARDRAIL POST.
2. 8"x4"x1/4" STEEL BASE PLATE WITH (2) 3/4" DIA.(GR.55) X 3" LONG HEADED STUDS.
3. CONCRETE SLAB ON GRADE.
4. 4" THICKEN SLAB.

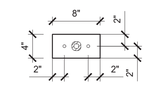

X SECTION

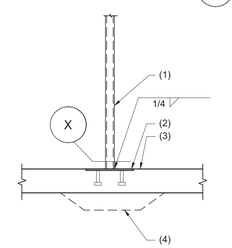

40 GUARDRAIL POST ON SLAB ON GRADE
SCALE: NTS

STONE- HARDIE PANEL OPTION

BRAMIC DESIGN GROUP PLLC
8003 S. GALILEO LN.
TUCSON, AZ 85747
PHONE: (520) 401-9183

COPYRIGHT NOTICE
This drawing is the property of the above referenced Professional and is not to be used for any purpose other than the specific project and site names herein, and cannot be reproduced in any manner without the express written permission from the Professional.

DATE	ISSUE
05.17.24	ISSUED FOR PERMIT REVIEW SET
07.08.24	TITLE BLOCK UPDATE

DATE	REVISION

PROFESSIONAL SEAL

PROFESSIONAL IN CHARGE
JSR

PROJECT MANAGER
GW

QUALITY CONTROL
JSR

DRAWN BY
GS

PROJECT ADDRESS
2920 S. PARK AVE
TUCSON ARIZONA 85713

VALVOLINE INSTANT OIL CHANGE

BDG PROJECT NUMBER
23-849

SHEET NAME
TYPICAL DETAILS

SHEET #
S1.6

ennovative.
Unsealed drawings shall be considered preliminary designs and shall not be used for construction or final bidding.

These drawings are copyrighted by ennovative. LLC. Drawings shall not be reused or reproduced, whole or in part, without the written consent of ennovative. LLC. ©

JOB: 23073

KEYNOTES

1. 4" CONCRETE SLAB ON GRADE REINFORCED WITH #3 AT 18" O.C. CENTERED IN SLAB OVER 4" A.B.C. - SEE ARCHITECTURAL DRAWINGS FOR VAPOR BARRIER REQUIREMENTS.
2. CONCRETE CONTROL JOINT PER DETAIL. SPACING BETWEEN JOINTS SHALL NOT EXCEED 12'-0".
3. LINE OF WALL ABOVE.
4. STEEL STAIRS. SEE TYPICAL DETAILS AND ARCHITECTURAL FOR MORE INFORMATION.

FOOTING (F) SCHEDULE

MARK	DIMENSION	THICKNESS	REINFORCING	REMARK
F1	1'-4"x CONTINUOUS	12"	(2) #5 CONTINUOUS	-
F2	5'-9"x CONTINUOUS	12"	(6) #5 LONGITUDINAL TOP AND BOTTOM AND #5 AT 12" O.C. TRANSVERSE TOP AND BOTTOM.	-

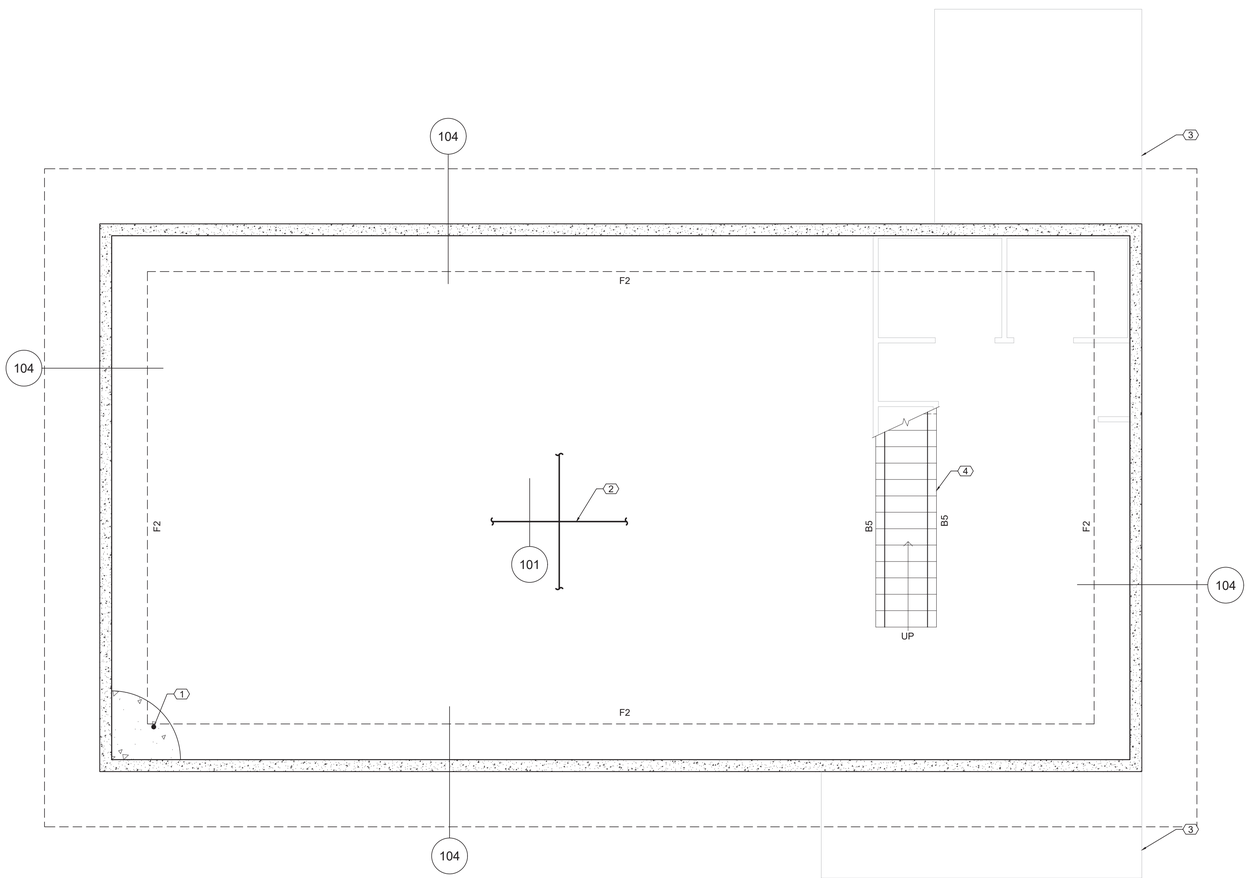

FOUNDATION PLAN

1/4" = 1'-0"

BRAMIC DESIGN GROUP PLLC
8003 S. GALILEO LN.
TUCSON, AZ 85747
PHONE: (520) 401-9183

COPYRIGHT NOTICE
This drawing is the property of the above referenced Professional and is not to be used for any purpose other than the specific project and site names herein, and cannot be reproduced in any manner without the express written permission from the Professional.

DATE	ISSUE
05.17.24	ISSUED FOR PERMIT REVIEW SET
07.08.24	TITLE BLOCK UPDATE

DATE	REVISION

PROFESSIONAL SEAL

PROFESSIONAL IN CHARGE
JSR

PROJECT MANAGER
GW

QUALITY CONTROL
JSR

DRAWN BY
GS

PROJECT ADDRESS
2920 S. PARK AVE
TUCSON ARIZONA 85713

VALVOLINE INSTANT OIL CHANGE

BDG PROJECT NUMBER
23-849

SHEET NAME
FOUNDATION PLAN

SHEET #
S2.0

ennovative.

Unsealed drawings shall be considered preliminary designs and shall not be used for construction or final bidding.

These drawings are copyrighted by ennovative. LLC. Drawings shall not be reused or reproduced, whole or in part, without the written consent of ennovative. LLC. ©

JOB: 23073

STONE- HARDIE PANEL OPTION

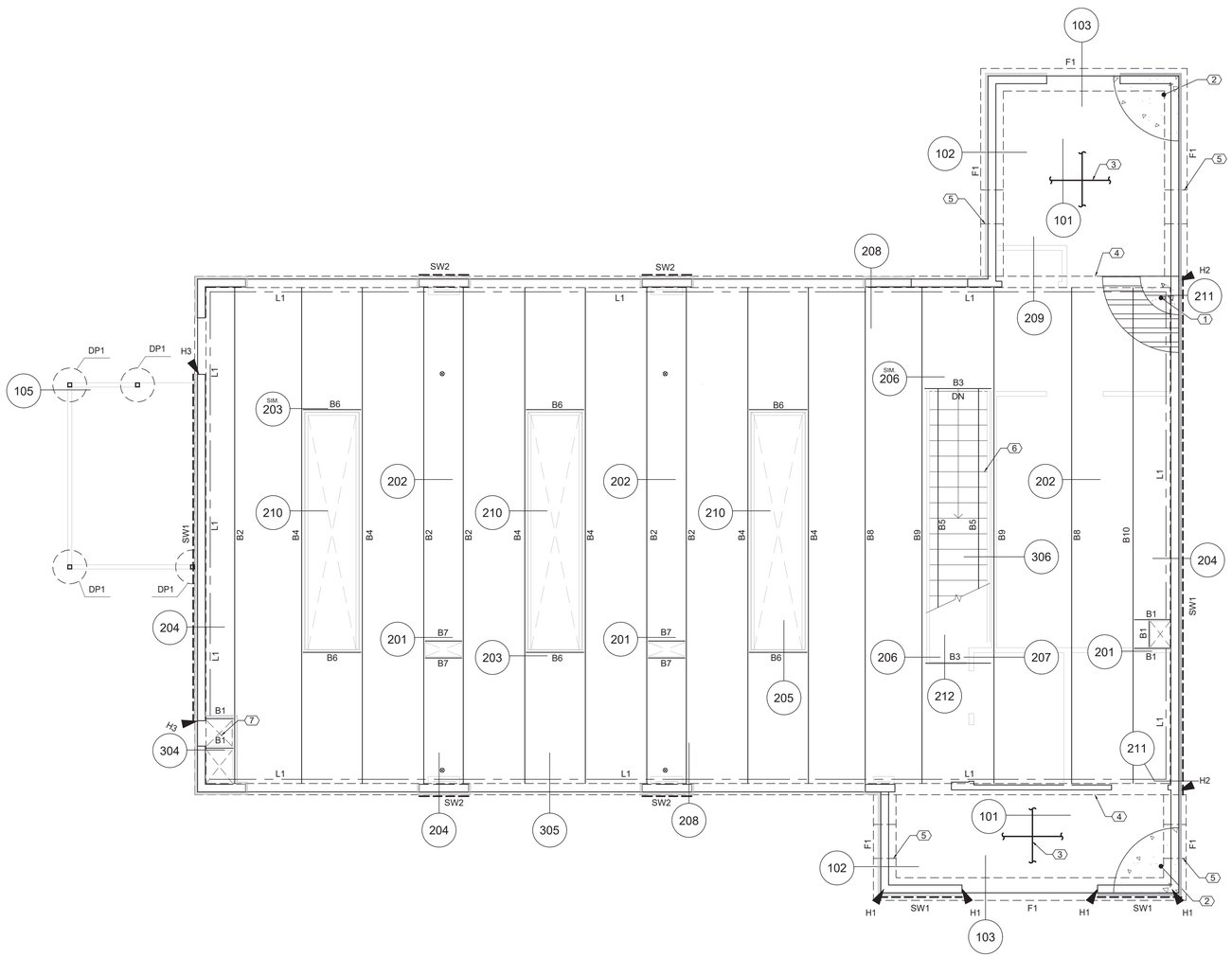

FLOOR FRAMING PLAN

1/4" = 1'-0"

KEYNOTES

1. 4" CONCRETE WITH WWF 6X6 - W1.2XW1.2 OVER 1" BR-36 20 GAUGE STEEL DECK (4" TOTAL THICKNESS).
2. 4" CONCRETE SLAB ON GRADE REINFORCED WITH #3 AT 18" O.C. CENTERED IN SLAB OVER 4" A.B.C. - SEE ARCHITECTURAL DRAWINGS FOR VAPOR BARRIER REQUIREMENTS.
3. CONCRETE CONTROL JOINT PER DETAIL. SPACING BETWEEN JOINTS SHALL NOT EXCEED 12'-0".
4. PROVIDE 1/2" PREFORMED JOINT FILLER AT ALL LOCATIONS WHERE EXTERIOR SLABS ABUT BUILDING U.N.O.
5. STEP FOOTING AS REQUIRED PER TYPICAL DETAIL.
6. STEEL STAIRS. SEE TYPICAL DETAILS AND ARCHITECTURAL FOR MORE INFORMATION.
7. MECHANICAL OPENING PER TYPICAL DETAILS. COORDINATE SIZE AND LOCATION WITH ARCHITECTURAL AND MECHANICAL DRAWINGS.

BEAM (B) SCHEDULE

MARK	TYPE	END CONNECTION (U.N.O.)	REMARK
B1	W8x10 (2)	SEE DETAILS	-
B2	W12x45 (20)	SEE DETAILS	-
B3	MC12x31	SEE DETAILS	-
B4	MC13x50	SEE DETAILS	-
B5	MC12x10.6	SEE DETAILS	-
B6	MC12X14.3	SEE DETAILS	
B7	W8X10 (6)	SEE DETAILS	
B8	W12X45 (22)	SEE DETAILS	
B9	W12X50 (20)	SEE DETAILS	
B10	W12X50 (22)	SEE DETAILS	-

LEDGER (L) SCHEDULE

MARK	LEDGER SIZE	CONNECTION	REMARK
L1	L4"X4" X1/4"	5/8" DIA. HILTI KWIK HUS-EZ BOLTS AT 32" O.C.	4" MIN. EMBEDMENT

NOTES:
1. ALL LEDGERS SHALL HAVE A MINIMUM OF TWO CONNECTIONS AND CONNECTIONS SHALL BE LOCATED NOT LESS THAN 6" AND NOT MORE THAN 1'-4" FROM END OF LEDGER OR LEDGER SPLICE.

HOLDOWN (H) SCHEDULE

MARK	TYPE	WALL ATTACHMENT	END STUDS	ANCHOR ATTACHMENT	REMARK
H1	SIMPSON DTT2Z-SDS2.5	(8) 1/4"x2 1/2" SDS SCREWS	(2) 2x6	1/2" DIA. SIMPSON PAB4	NOTE 1
H2	SIMPSON HDU2-SDS2.5	(6) 1/4"x2 1/2" SDS SCREWS	(2) 2x6	5/8" DIA. SIMPSON PAB5	NOTE 1
H3	SIMPSON HDU4-SDS2.5	(10) 1/4"x2 1/2" SDS SCREWS	(2) 2x6	5/8" DIA. SIMPSON PAB5	NOTE 1

NOTES:
1. 6" MINIMUM EMBEDMENT.

FOOTING (F) SCHEDULE

MARK	DIMENSION	THICKNESS	REINFORCING	REMARK
F1	1'-4"x CONTINUOUS	12"	(2) #5 CONTINUOUS	-
F2	5'-9"x CONTINUOUS	12"	(6) #5 LONGITUDINAL TOP AND BOTTOM AND #5 AT 12" O.C. TRANSVERSE TOP AND BOTTOM.	-

DRILLED PIER FOOTING (DP) SCHEDULE

MARK	SHAFT DIAMETER	DEPTH BELOW FINISHED GRADE	REINFORCING		REMARK
			VERTICAL	TIES	
DP1	2'-0"	3'-0"	(12) #6	#3 AT 12" O.C.	-

SHEAR WALL (SW) SCHEDULE

MARK	SHEATHING MATERIAL AND ATTACHMENT					SILL PLATE ATTACHMENT		REMARK
	TYPE	MATERIAL THICKNESS	NUMBER OF FACES	EDGE ATTACHMENT	FIELD ATTACHMENT	ATTACHMENT TYPE	ATTACHMENT SPACING	
SW1	W.S.P.	3/8"	1	8d AT 6" O.C.	8d AT 12" O.C.	5/8" DIA. HILTI KWIK HUS-EZ	24" O.C.	-
SW2	WSWH24x HEIGHT REQD. (13' MAX)	-	--	--	--	SIMPSON WSWH-AB1 STANDARD (12" EMBED	-	SIMPSON STRONG WALL LITERATURE

NOTES:
1. SEE TYPICAL DETAILS FOR ADDITIONAL INFORMATION.
2. MAXIMUM STUD SPACING IS 16" O.C.
3. EDGE ATTACHMENT SPACING APPLIES TO ALL STUDS AT PANEL EDGES, TOP AND BOTTOM PLATES AND BLOCKING AT PANEL EDGES.
4. LOCATE FASTENERS 3/8" MINIMUM FROM EDGES.
5. FASTENERS AT WOOD STRUCTURAL PANELS SHALL BE COMMON OR GALVANIZED BOX NAILS.
6. FASTENERS AT GYP BOARD PANELS SHALL BE COOLER NAILS OR TYPE "S" OR "W" DRYWALL SCREWS (1 1/4" LONG) SPACED AS INDICATED IN SCHEDULE.
7. ALL PLYWOOD PANEL EDGES SHALL BE BLOCKED WITH 2X FRAMING.
8. PROVIDE (2) 2X STUDS U.N.O. AT END OF ALL SHEAR WALLS.
9. WHERE 8D NAILS ARE SPACED 2" O.C. OR WHERE 10D NAILS ARE SPACED AT 3" O.C., FRAMING AT ADJOINING PLYWOOD PANEL EDGES SHALL BE 3X NOMINAL OR NAILS SHALL BE STAGGERED EACH SIDE OF PLYWOOD JOINT.
10. WHERE PANELS ARE APPLIED ON BOTH FACES AND NAIL SPACING IS LESS THAT 6" ON CENTER ON EITHER SIDE, PANEL JOINTS SHALL BE OFFSET TO FALL ON DIFFERENT FRAMING MEMBERS OR THE FRAMING AT ADJOINING PANEL EDGES SHALL BE 3X NOMINAL AND THE NAILS SHALL BE STAGGERED EACH SIDE OF JOINT.
11. PROVIDE A MINIMUM OF (2) SILL ATTACHMENTS AT SHEAR WALLS.

ennovative.

Unsealed drawings shall be considered preliminary designs and shall not be used for construction or final bidding.

These drawings are copyrighted by ennovative. LLC. Drawings shall not be reused or reproduced, whole or in part, without the written consent of ennovative. LLC. ©

JOB: 23073

STONE- HARDIE PANEL OPTION

BRAMIC DESIGN GROUP PLLC
8003 S. GALILEO LN.
TUCSON, AZ 85747
PHONE: (520) 401-9183

COPYRIGHT NOTICE
This drawing is the property of the above referenced Professional and is not to be used for any purpose other than the specific project and site names herein, and cannot be reproduced in any manner without the express written permission from the Professional.

DATE	ISSUE
05.17.24	ISSUED FOR PERMIT REVIEW SET
07.08.24	TITLE BLOCK UPDATE

DATE	REVISION

PROFESSIONAL SEAL

PROFESSIONAL IN CHARGE
JSR

PROJECT MANAGER
GW

QUALITY CONTROL
JSR

DRAWN BY
GS

PROJECT ADDRESS
2920 S. PARK AVE
TUCSON ARIZONA 85713

VALVOLINE INSTANT OIL CHANGE

BDG PROJECT NUMBER
23-849

SHEET NAME
FLOOR FRAMING PLAN

SHEET #
S2.1

KEYNOTES

1. 3"Ø OPENING, COORD W/ VIOC CONST PM.

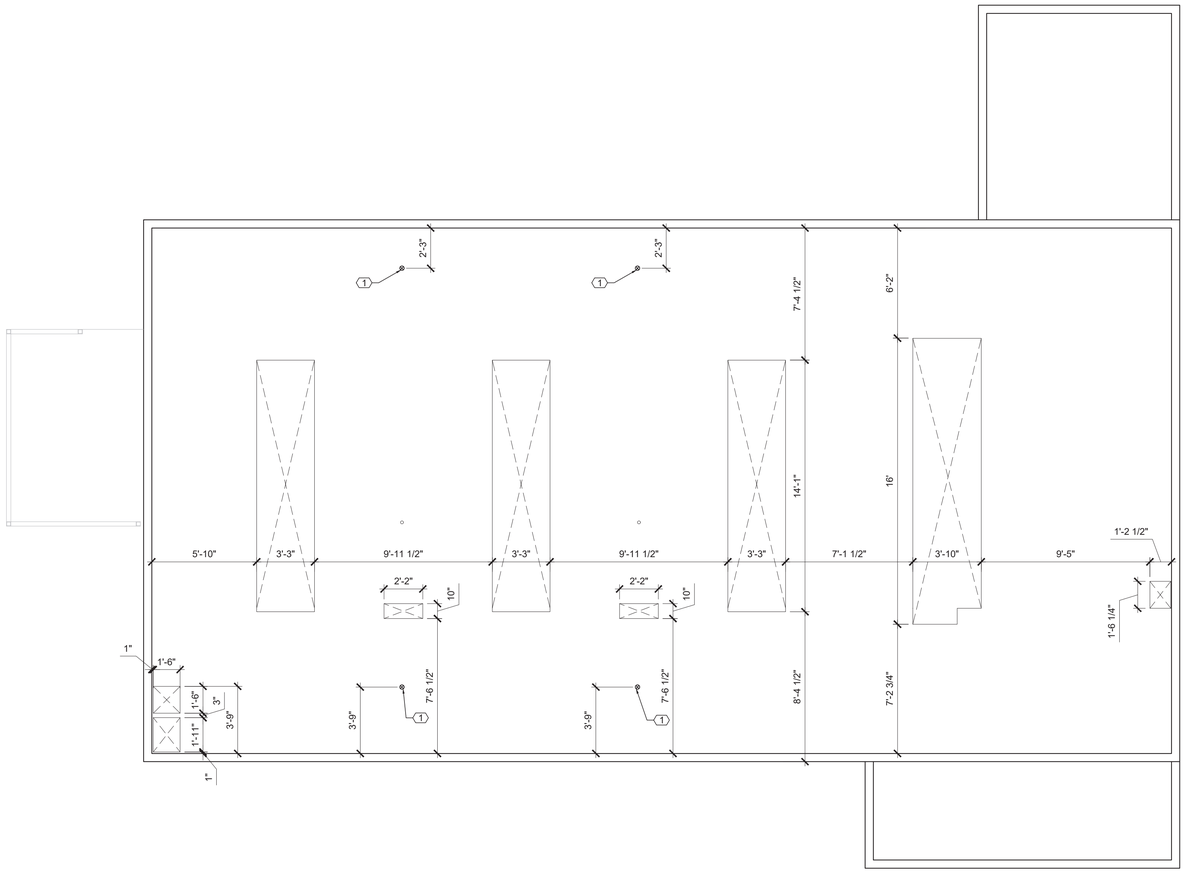

FLOOR PENETRATION DIMENSIONED PLAN

1/4" = 1'-0"

BRAMIC DESIGN GROUP PLLC

8003 S. GALILEO LN.
TUCSON, AZ 85747
PHONE: (520) 401-9183

COPYRIGHT NOTICE
This drawing is the property of the above referenced Professional and is not to be used for any purpose other than the specific project and site names herein, and cannot be reproduced in any manner without the express written permission from the Professional.

DATE	ISSUE
05.17.24	ISSUED FOR PERMIT REVIEW SET
07.08.24	TITLE BLOCK UPDATE

DATE	REVISION

PROFESSIONAL SEAL

PROFESSIONAL IN CHARGE
JSR

PROJECT MANAGER
GW

QUALITY CONTROL
JSR

DRAWN BY
GS

PROJECT ADDRESS
2920 S. PARK AVE
TUCSON ARIZONA 85713

VALVOLINE INSTANT OIL CHANGE

BDG PROJECT NUMBER
23-849

SHEET NAME
FLOOR PENETRATION PLAN

SHEET #
S2.2

ennovative.

Unsealed drawings shall be considered preliminary designs and shall not be used for construction or final bidding.

These drawings are copyrighted by ennovative. LLC. Drawings shall not be reused or reproduced, whole or in part, without the written consent of ennovative. LLC. ©

JOB: 23073

STONE- HARDIE PANEL OPTION

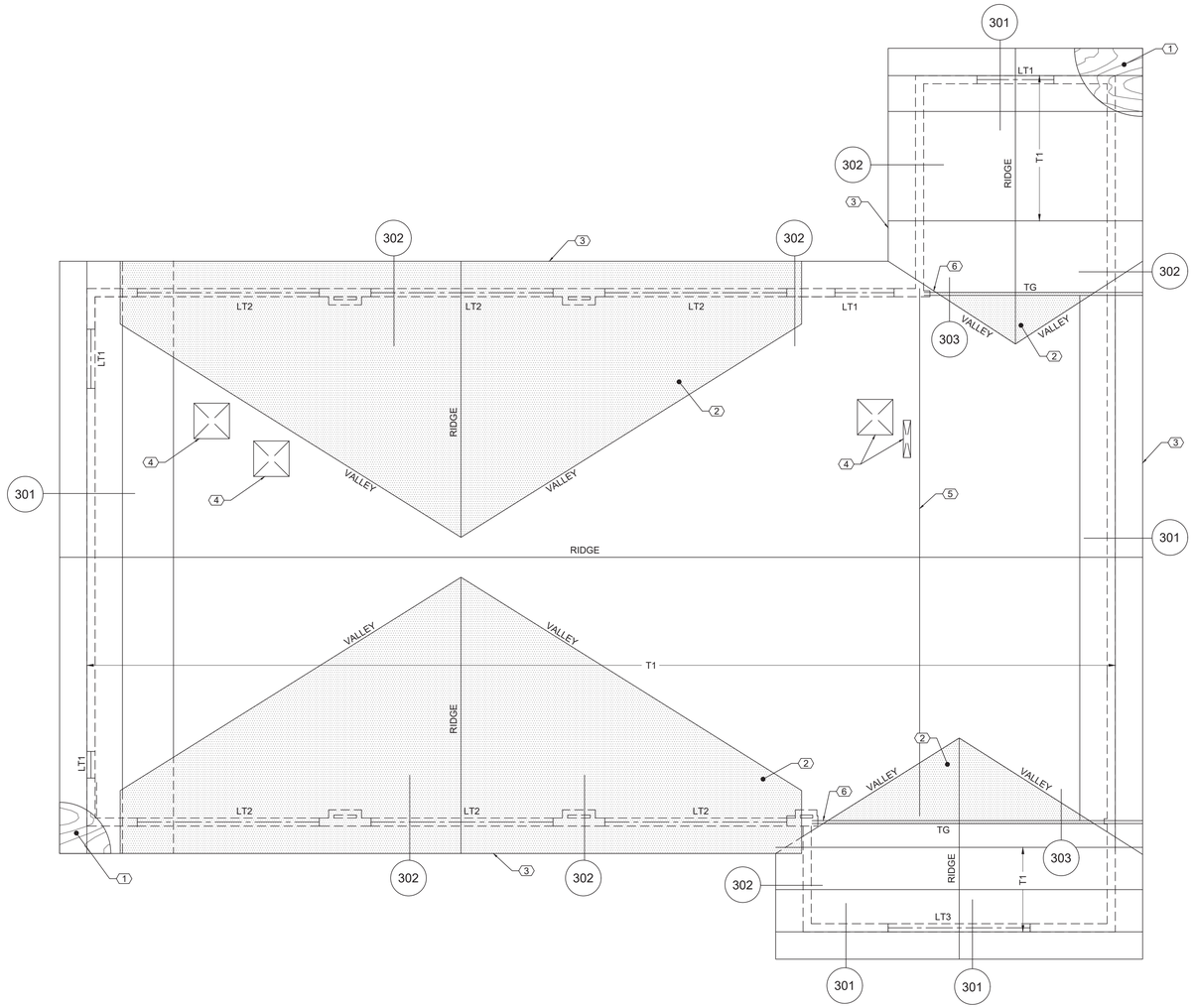

ROOF FRAMING PLAN

1/4" = 1'-0"

KEYNOTES

1. 1/2" PLYWOOD SHEATHING - TYPICAL AT BUILT-UP ROOFS. FOR LAYUP AND ATTACHMENT, SEE G.S.N.
2. OVER-FRAMING PER TRUSS MANUFACTURER COORDINATE LOCATION AND CONFIGURATION WITH ARCHITECTURAL DRAWINGS.
3. 2X CONTINUOUS FASCIA WITH (2) 16d NAILS EACH OUTRIGGER / TRUSS.
4. MECHANICAL OPENING PER TYPICAL DETAILS. COORDINATE SIZE AND LOCATION WITH ARCHITECTURAL AND MECHANICAL DRAWINGS.
5. ALIGN AND ATTACH TRUSS TO WOOD STUD WALL/SHEAR WALL TOP PLATE WITH SIMPSON HTS16 TWIST STRAP. THE TRUSS SHALL BE DESIGNED FOR AN AXIAL LOAD OF 1000 LBS (ASD) WIND OR SEISMIC.
6. ALIGN AND ATTACH TRUSS GIRDER TO SHEAR WALL/WALL TOP PLATE WITH SIMPSON DSC2-SDS3. THE TRUSS SHALL BE DESIGNED FOR AN AXIAL LOAD OF 2400 LBS ASD WIND OR SEISMIC.

NOTES:

- WALLS UP TO 13'-6" HEIGHT SHALL BE 2x6 DF #2 STUDS AT 16" O.C.

TRUSS (T) SCHEDULE

MARK	PROFILE	DEPTH	MAX SPACING	REMARK
T1	A	VARIES	24" O.C.	-

NOTES:
1. SEE G.S.N. FOR MORE INFORMATION.
2. SEE ARCHITECTURAL DRAWINGS FOR REQUIRED DIMENSIONS, DEPTHS AND PROFILES.
3. TRUSS GIRDER DESIGNED AS "TG_" TO MATCH SLOPES AND PROFILES PER ARCHITECTURAL.
4. SEE MECHANICAL PLANS FOR MORE INFORMATION.
5. TRUSS MANUFACTURER SHALL BE RESPONSIBLE FOR ALL TRUSS TO TRUSS CONNECTIONS.
6. TRUSS MANUFACTURER SHALL BE RESPONSIBLE FOR TRUSS HANGERS.
7. TRUSSES SHALL BE DESIGNED FOR AN ADDITIONAL 300 LBS CONCENTRATED DEAD LOAD AT ANY POINT.
8. PROVIDE SIMPSON TBE TYPE TRUSS CONNECTOR AT TRUSS GIRDERS, U.N.O.
9. DEFLECTION AT TOP OF PARAPET TO MEET OR EXCEED 2L/240.
10. RIM TRUSSES SHALL BE DESIGNED FOR 1100 PLF DEAD LOAD, 360 PLF ROOF LIVE LOAD, AND 300 PLF FLOOR LIVE LOAD. WHERE STONE VENEER EXISTS (2 STORIES MAX HEIGHT AS SHOWN ON ARCHITECTURAL DRAWINGS) ADD 200 PLF DEAD LOAD AT RIM TRUSSES AT 2ND LEVEL.
11. TRUSS GIRDER UPLIFT CONNECTIONS SHALL BE VERIFIED WITH ROOF TRUSS SHOP DRAWINGS, BUT SHALL MEET THE FOLLOWING MINIMUM:
    - SINGLE PLY - SIMPSON H2.5A
    - DOUBLE PLY - (2) SIMPSON H2.5A
    - TRIPLE PLY AND GREATER - (2) SIMPSON H6

A	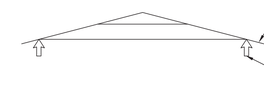	SEE PLANS FOR BEARING POINT LOCATIONS

TYPICAL LINTEL SCHEDULE

MARK	TYPE	LINTEL	TRIM	JAMB	REMARK
LT1	WOOD	(3) 2x6	(1) 2x6	(2) 2x6	-
LT2	WOOD	6x12	(2) 2x6	(3) 2x6	-
LT3	WOOD	(3) 2x8	(1) 2x6	(3) 2x6	-

BRAMIC DESIGN GROUP PLLC
8003 S. GALILEO LN.
TUCSON, AZ 85747
PHONE: (520) 401-9183

COPYRIGHT NOTICE
This drawing is the property of the above referenced Professional and is not to be used for any purpose other than the specific project and site names herein, and cannot be reproduced in any manner without the express written permission from the Professional.

DATE	ISSUE
05.17.24	ISSUED FOR PERMIT REVIEW SET
07.08.24	TITLE BLOCK UPDATE

DATE	REVISION

PROFESSIONAL SEAL

PROFESSIONAL IN CHARGE
JSR
PROJECT MANAGER
GW
QUALITY CONTROL
JSR
DRAWN BY
GS

PROJECT ADDRESS
2920 S. PARK AVE
TUCSON ARIZONA 85713

VALVOLINE INSTANT OIL CHANGE

BDG PROJECT NUMBER
23-849

SHEET NAME
ROOF FRAMING PLAN

SHEET #
S3.0

ennovative.

Unsealed drawings shall be considered preliminary designs and shall not be used for construction or final bidding.

These drawings are copyrighted by ennovative. LLC. Drawings shall not be reused or reproduced, whole or in part, without the written consent of ennovative. LLC. ©

JOB: 23073

STONE- HARDIE PANEL OPTION

NOTES:

1. CONCRETE SLAB ON GRADE.
2. SAWCUT 1/8" WIDE X 1/4 SLAB THICKNESS DEEP. CUT SHALL BE MADE SOON ENOUGH TO PREVENT SHRINKAGE CRACKING, BUT NOT SO SOON AS TO CAUSE SPALLING OF THE CONCRETE WHILE SAWING. WORK MUST BE ACCOMPLISHED WITHIN 24 HOURS OF CONCRETE PLACEMENT.
3. CONTINUOUS KEY, SEE TYPICAL KEY IN CONCRETE DETAIL.
4. REINFORCING STEEL PER PLAN.
5. TAPED REBAR AT SAWN JOINT LOCATION FOR SLIPPAGE.
6. DOWEL TO MATCH SLAB REINFORCING, SEE TYPICAL DETAILS FOR DEVELOPMENT LENGTH.

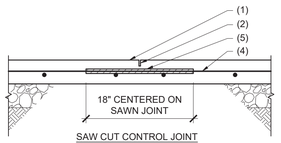

SAW CUT CONTROL JOINT

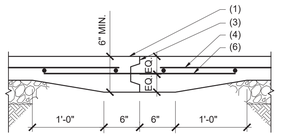

KEYED CONSTRUCTION JOINT

101 TYPICAL JOINTS IN CONCRETE SLAB ON GRADE
SCALE: NTS --

NOTES:

1. WOOD STUD WALL.
2. 8" CONCRETE STEM WALL AND FOOTING.
3. CONCRETE SLAB.
4. 2X CONTINUOUS WOOD PLATE.
5. ALTERNATE BENDS.
6. #5 CONTINUOUS.
7. #5 HORIZONTAL AT 14" O.C.
8. 5/8" DIA. HILTI KWIK HUS-EZ AT 24" O.C.
9. CONCRETE SLAB WHERE SHOWN ON PLAN OR FINISHED GRADE.
10. #4 DOWELS AT 48" O.C.
11. SHEATHING MATERIAL AND ATTACHMENT AS OCCURS.
12. #5 DOWELS AT 16" O.C. LAP VERTICAL REINFORCING CENTERED IN THE WALL.
13. REINFORCING PER PLANS AND SCHEDULES.

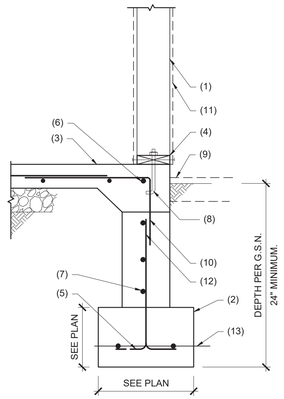

102 EXTERIOR WOOD STUD WALL FOOTING
SCALE: NTS --

NOTES:

1. WALL BEYOND.
2. 8" CONCRETE STEM WALL AND FOOTING.
3. CONCRETE SLAB.
4. REINFORCING PER PLANS AND SCHEDULES.
5. ALTERNATE BENDS.
6. #5 CONTINUOUS.
7. #5 HORIZONTAL AT 14" O.C.
8. CONCRETE SLAB WHERE SHOWN ON PLAN OR FINISHED GRADE.
9. #4 DOWELS AT 48" O.C.
10. #5 DOWELS AT 16" O.C. LAP VERTICAL REINFORCING CENTERED IN THE WALL.

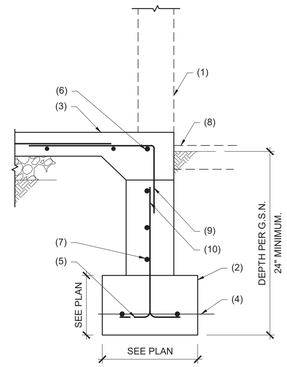

103 EXTERIOR FOOOTING AT WALL OPENING
SCALE: NTS --

NOTES:

1. CONCRETE WALL.
2. WALL DOWELS SAME SIZE AND SPACING AS VERTICAL REBAR.
3. CONCRETE SLAB.
4. WATERPROOFING MEMBRANE AND PROTECTION BOARD PER ARCHITECTURAL.
5. FILTER FABRIC.
6. 3/4" CLEAN STONE TO 6" MINIMUM ABOVE PIPE.
7. 4" DIA. DRAINAGE PIPE.
8. UNDISTURBED SOIL.
9. CONCRETE FOOTING.
10. #4 DOWEL AT 8" O.C.
11. LATERAL RESISTANCE AND FOOTING TO SLAB DOWELS OR CONCRETE SHEAR BLOCK AS REQUIRED.
12. LAP 48 TIMES REBAR DIAMETER.
13. REINFORCING PER PLANS AND SCHEDULE.
14. #4 VERTICAL AT 8" O.C. AT SOIL FACE WITH 1.5" CLEAR COVER AND 12" O.C. HORIZONTAL.
15. 1 1/2" MIN. COVER.

TYPICAL NOTES:

- SEE FRAMING DETAIL FOR MORE INFORMATION.

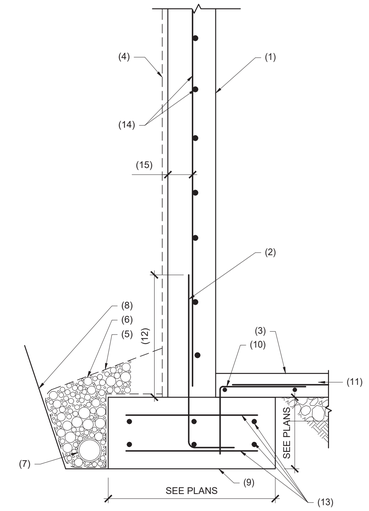

104 EXTERIOR 9" CONCRETE BASEMENT WALL AND FOOTING
SCALE: NTS --

NOTES:

1. CONCRETE CAISSON WITH REINFORCING PER SCHEDULE.
2. FINISHED GRADE OR CONCRETE SLAB AS OCCURS.
3. STEEL HORIZONTAL RAILS BY OTHERS.
4. TUBE STEEL POSTS.
5. PERFORATED STEEL PANEL MESH BY OTHERS.
6. WELDED STEEL PLATE BY OTHERS.
7. #3 TIES AT 12" O.C. (3 TIES IN TOP 5" OF PEDESTAL)
8. 3/8" CAP PLATE BUTT WELDED TO POST.

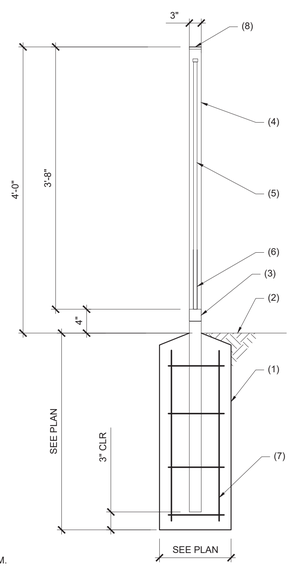

TYPICAL NOTES:

- SIZES PROVIDED ARE MINIMUM. REFER TO ARCHITECTURAL DRAWINGS FOR ADDITIONAL INFORMATION FOR FABRICATION & FINNISH INFORMATION.

105 FENCE POST FOUNDATION
SCALE: NTS -

STONE- HARDIE PANEL OPTION

BRAMIC DESIGN GROUP PLLC
8003 S. GALILEO LN.
TUCSON, AZ 85747
PHONE: (520) 401-9183

COPYRIGHT NOTICE
This drawing is the property of the above referenced Professional and is not to be used for any purpose other than the specific project and site names herein, and cannot be reproduced in any manner without the express written permission from the Professional.

DATE	ISSUE
05.17.24	ISSUED FOR PERMIT REVIEW SET
07.08.24	TITLE BLOCK UPDATE

DATE	REVISION

PROFESSIONAL SEAL

PROFESSIONAL IN CHARGE
JSR
PROJECT MANAGER
GW
QUALITY CONTROL
JSR
DRAWN BY
GS

PROJECT ADDRESS
2920 S. PARK AVE
TUCSON ARIZONA 85713

VALVOLINE INSTANT OIL CHANGE

BDG PROJECT NUMBER
23-849

SHEET NAME
FOUNDATION DETAILS

SHEET #
S4.0

ennovative.
Unsealed drawings shall be considered preliminary designs and shall not be used for construction or final bidding.

These drawings are copyrighted by ennovative. LLC. Drawings shall not be reused or reproduced, whole or in part, without the written consent of ennovative. LLC. ©

JOB: 23073

NOTES:

1. STEEL BEAM (BEAM SKEWED WHERE OCCURS - SEE PLAN).
2. 3/8" STEEL SHEAR PLATE.
3. FOR SIZE, TYPE AND NUMBER OF BOLTS, SEE TYPICAL BOLT SCHEDULE.
4. "D" = LESSER OF BEAM DEPTHS AS OCCURS.
5. WELD 3 SIDES TYPICAL -USE SAME CONNECTION AT STIFFENER PLATES WHEN REQUIRED.
6. COPE NEAR SIDE OF BEAM FLANGE TO CLEAR STIFFENER.

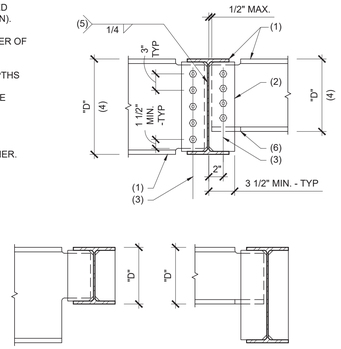

TYPICAL NOTES:

- AT ONE SIDED CONNECTIONS, INSTALL 3/8" STIFFENER PLATE OPPOSITE SHEAR PLATE.

201 TYPICAL FRAMED BEAM TO BEAM CONNECTION
SCALE: NTS --

NOTES:

1. CONCRETE OVER STEEL DECK - FOR DIRECTION OF DECK, SEE PLANS - STEEL DECK MAY BE SPLIT AS REQUIRED.
2. WELDED WIRE FABRIC.
3. STEEL BEAM.
4. 3/4" DIA. X 3" HEADED STUDS.

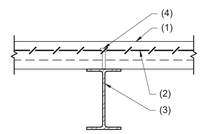

TYPICAL NOTES:

- TOP FLANGE OF BEAM MUST BE FREE OF PAINT, DIRT, RUST AND OIL - TYPICAL.

202 STEEL METAL DECK TO STEEL BEAM
SCALE: NTS --

NOTES:

1. STEEL CHANNEL.
2. 3/4" DIA. X 3" HEADED STUDS.
3. CONCRETE OVER STEEL DECK, FOR DIRECTION OF DECK, SEE PLANS.
4. REINFORCING WHERE REQUIRED.
5. 3/8" STEEL SHEAR PLATE.

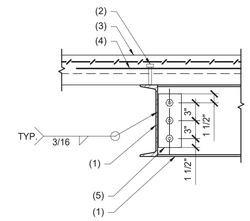

203 STEEL CHANNEL TO STEEL CHANNEL CONNECTION
SCALE: NTS --

NOTES:

1. CONCRETE WALL.
2. CONCRETE SLAB OVER STEEL DECK. FOR DIRECTION OF DECK, SEE PLAN.
3. CONTINUOUS STEEL LEDGER AND ATTACHMENT PER SCHEDULE.
4. FINISHED GRADE OR CONCRETE SLAB AS OCCURS.
5. WOOD STUD WALL.
6. 2X CONTINUOUS WOOD PLATE AND 5/8" DIA. HILTI KWIK HUS-EZ AT 24" O.C.
7. SHEATHING MATERIAL AND ATTACHMENT AS OCCURS.
8. BRICK VENEER PER ARCH.
9. DEPTH PER ARCHITECTURAL.
10. GAP PER ARCHITECTURAL.
11. WALL REINFORCING PER DETAIL 104.

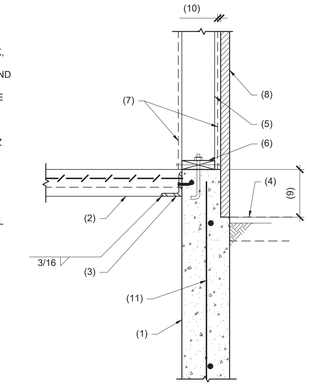

204 STEEL DECK TO CONCRETE WALL
SCALE: NTS --

NOTES:

1. STEEL BEAM.
2. CONCRETE OVER STEEL DECK, FOR DIRECTION OF DECK, SEE PLANS.
3. WELD ANGLE TO BEAM - TYP.
4. 2" TYPICAL.
5. 2'-0" MIN.
6. REINFORCING WHERE REQUIRED.
7. 0" TO 6" NO REINFORCING REQUIRED, 6" TO 12" ADD #4 REINFORCING AT 12" O.C., 12" TO 18" ADD #5 REINFORCING AT 12" O.C.
8. 1/4" CONTINUOUS BENT STEEL PLATE.

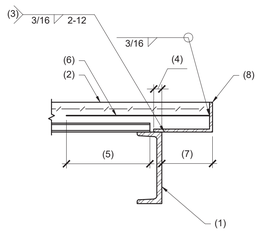

TYPICAL NOTES:

- SHORE PLATE UNTIL CONCRETE REACHES DESIGN STRENGTH WHERE 1/4" BENT PLATE EXCEEDS 6" IN LENGTH.

205 STEEL DECK AT STEEL BEAM
SCALE: NTS --

NOTES:

1. STEEL BEAM.
2. CONCRETE OVER STEEL DECK, FOR DIRECTION OF DECK, SEE PLANS.
3. STEEL CHANNEL.
4. 3/8" STEEL SHEAR PLATE - USE 5/8" STEEL SHEAR PLATE WHERE "D" = 27" OR GREATER.
5. FOR SIZE, TYPE AND NUMBER OF BOLTS, SEE TYPICAL BOLT SCHEDULE.
6. REINFORCING WHERE REQUIRED.
7. WELD 3 SIDES TYPICAL - USE SAME CONNECTION AT STIFFENER PLATES WHEN REQUIRED.
8. 3/4" DIA. X 3" HEADED STUDS.

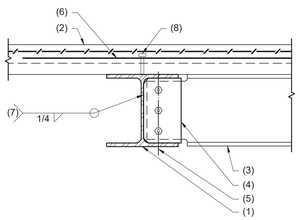

206 STEEL CHANNEL AT STEEL BEAM
SCALE: NTS --

NOTES:

1. STEEL BEAM.
2. CONCRETE OVER STEEL DECK, FOR DIRECTION OF DECK, SEE PLANS.
3. 1/4" CONTINUOUS BENT STEEL PLATE.
4. WOOD STUD WALL.
5. 2X CONTINUOUS WOOD PLATE WITH SIMPSON SHOT PIN.
6. REINFORCING WHERE REQUIRED.

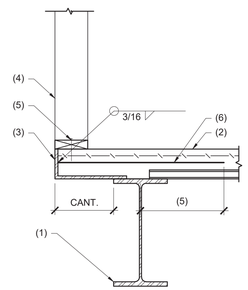

TYPICAL NOTES:

- SHORE PLATE UNTIL CONCRETE REACHES DESIGN STRENGTH WHERE 1/4" BENT PLATE EXCEEDS 6" IN LENGTH.

207 STEEL DECK AND WOOD WALL AT STEEL BEAM
SCALE: NTS --

NOTES:

1. CONCRETE SLAB WHERE SHOWN ON PLAN OR FINISHED GRADE.
2. L6X6X3/8" LONG ANGLE WITH 3/8" GUSSET PLATE.
3. CONCRETE WALL.
4. BRICK VENEER PER ARCH.
5. STEEL BEAM.
6. WALL REINFORCING PER DETAIL 104.
7. STEEL PLATE 3/4" X 14" X 12" (LSV) WITH (6) 3/4" DIA.(GR.55) x 5" LONG HEADED STUDS.
8. SHEATHING MATERIAL AND ATTACHMENT AS OCCURS.
9. CONCRETE SLAB OVER STEEL DECK. FOR DIRECTION OF DECK, SEE PLAN.
10. WELDED WIRE FABRIC.
11. WOOD STUD WALL.
12. 2X CONTINUOUS WOOD PLATE AND 5/8" DIA. HILTI KWIK HUS-EZ AT 24" O.C.
13. DEPTH PER ARCHITECTURAL.
14. CONTINUOUS STEEL LEDGER AND ATTACHMENT PER SCHEDULE.

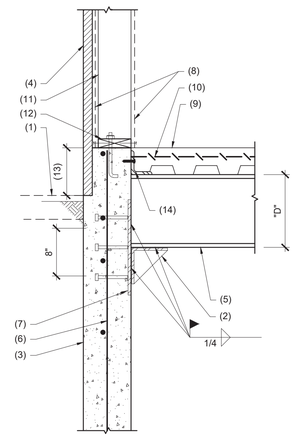

208 STEEL BEAM AT CONCRETE PANEL
SCALE: NTS --

NOTES:

1. CONCRETE WALL.
2. CONCRETE SLAB OVER STEEL DECK. FOR DIRECTION OF DECK, SEE PLAN.
3. CONTINUOUS STEEL LEDGER AND ATTACHMENT PER SCHEDULE.
4. FINISHED GRADE OR CONCRETE SLAB AS OCCURS.
5. WOOD STUD WALL.
6. 2X CONTINUOUS WOOD PLATE AND 5/8" DIA. HILTI KWIK HUS-EZ AT 24" O.C.
7. SHEATHING MATERIAL AND ATTACHMENT AS OCCURS.
8. BRICK VENEER PER ARCH.
9. DEPTH PER ARCHITECTURAL.
10. GAP PER ARCHITECTURAL.
11. WALL REINFORCING PER DETAIL 104.

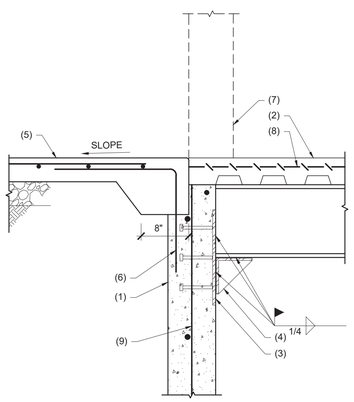

209 STEEL BEAM TO CONCRETE WALL
SCALE: NTS --

NOTES:

1. NOTCH METAL DECK AT STIFFENERS (NOTE: DECK ORIENTATION VARIES, SEE PLAN).
2. STEEL BEAM.
3. L2X2X3/16" FOR TROLLEY RAILS.
4. 1-1/4X1-1/4 TS AS REQUIRED FOR PIT BULL SAFETY NET.
5. CONTINUOUS L3X3X1/4" WITH 1/4" STIFF PL AT 2'-10" C/C.
6. CONTINUOUS 3/8" PLATE.
7. GRIND SMOOTH.
8. SEE ARCH.

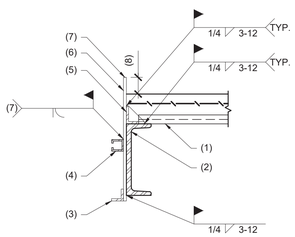

TYPICAL NOTES:

- PLATES SHALL BE CONTINUOUS & WELDED AT ALL JOINTS & FLOOR OPENING CORNERS w/ 1/4" FILLET WELDS, GRIND SMOOTH WHERE REQUIRED.

ALL STEEL TO BE HOT DIP GALVANIZED PRIOR TO INSTALLATION & PAINTING. GALVANIZED STEEL SHALL COMPLY w/ ASTM A123, A143 & A153. TOUCH UP ANY WELD w/ GALVANIZED REPAIR PAINT OBTAINED FROM GALVANIZER.

210 STEEL DECK AT STEEL BEAM
SCALE: NTS --

NOTES:

1. CONCRETE WALL.
2. CONCRETE SLAB OVER STEEL DECK. FOR DIRECTION OF DECK, SEE PLAN.
3. CONTINUOUS STEEL LEDGER AND ATTACHMENT PER SCHEDULE.
4. CONCRETE SLAB WHERE SHOWN ON PLAN OR FINISHED GRADE.
5. WOOD STUD WALL.
6. 2X CONTINUOUS WOOD PLATE AND 5/8" DIA. HILTI KWIK HUS-EZ AT 24" O.C.
7. SHEATHING MATERIAL AND ATTACHMENT AS OCCURS.
8. BRICK VENEER PER ARCH.
9. HOLDOWN AND ANCHOR PER PLANS.
10. DEPTH PER ARCHITECTURAL.
11. WALL REINFORCING PER DETAIL 104.

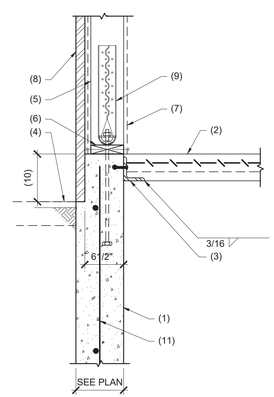

211 STEEL DECK TO CONCRETE WALL
SCALE: NTS --

NOTES:

1. CONCRETE SLAB OVER STEEL DECK.
2. STEEL BEAM.
3. CONTINUOUS STEEL ANGLE WITH 3/4" DIA. EXPANSION BOLT AT 16" O.C.
4. 1 1/2"x1 1/2"x12 GAUGE GUARDRAIL POST.
5. 1 1/2"x1 1/2"x10 GAGE STEEL RAIL.

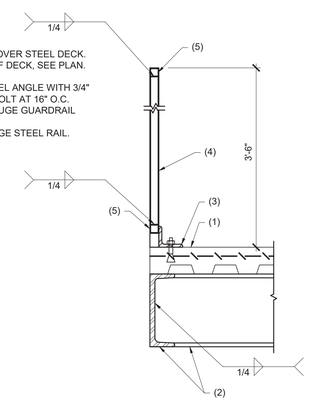

212 STEEL DECK AT STEEL BEAM
SCALE: NTS --

ennovative.

Unsealed drawings shall be considered preliminary designs and shall not be used for construction or final bidding.

These drawings are copyrighted by ennovative. LLC. Drawings shall not be reused or reproduced, whole or in part, without the written consent of ennovative. LLC. ©

JOB: 23073

STONE- HARDIE PANEL OPTION

BRAMIC DESIGN GROUP PLLC
8003 S. GALILEO LN.
TUCSON, AZ 85747
PHONE: (520) 401-9183

COPYRIGHT NOTICE
This drawing is the property of the above referenced Professional and is not to be used for any purpose other than the specific project and site names herein, and cannot be reproduced in any manner without the express written permission from the Professional.

DATE	ISSUE
05.17.24	ISSUED FOR PERMIT REVIEW SET
07.08.24	TITLE BLOCK UPDATE

DATE	REVISION

PROFESSIONAL SEAL

PROFESSIONAL IN CHARGE
JSR

PROJECT MANAGER
GW

QUALITY CONTROL
JSR

DRAWN BY
GS

PROJECT ADDRESS
2920 S. PARK AVE
TUCSON ARIZONA 85713

Valvoline Instant Oil Change

VALVOLINE INSTANT OIL CHANGE

BDG PROJECT NUMBER
23-849

SHEET NAME

ROOF FRAMING DETAILS

SHEET #

S5.0

NOTES:

1. PLYWOOD SHEATHING.
2. PREFABRICATED WOOD TRUSS.
3. WOOD OUTRIGGER WITH SIMPSON A34 AT EACH END.
4. 2X4 JOIST AT 16" O.C..
5. 2 X 4 BRACE AT 48" O.C..
6. SHEATHING MATERIAL AND ATTACHMENT AS OCCURS.
7. WOOD STUD WALL.
8. EDGE NAILING.
9. SIMPSON H2.5A AT EACH OUTRIGGER.
10. 2 X BLOCKING WITH (3) 16d TOENAILS.
11. 2X FASCIA WITH (2) 16d NAILS EACH OUTRIGGER.
12. DOUBLE 2 X TOP PLATE WITH 16d NAILS AT 12" O.C.
13. SIMPSON A35 AT 16" O.C.
14. WOOD BEAM/LINTEL WHERE OCCURS.
15. 2X WOOD PLATE WITH 16d NAILS AT 12" O.C. WHERE OCCURS.
16. SIMPSON A34 AT EACH BRACE.
17. (3) 10d NAILS AT EACH BRACE.

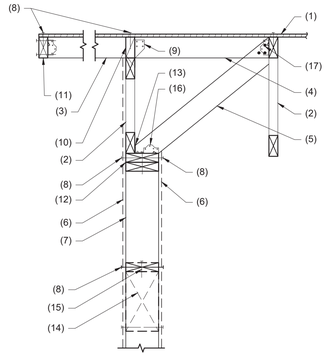

301 PREFABRICATED WOOD TRUSS AT WOOD STUD WALL
SCALE: NTS

NOTES:

1. PREFABRICATED WOOD TRUSS.
2. PLYWOOD SHEATHING.
3. 2x CONT. BLOCKING.
4. SIMPSON A34 AND H2.5A EACH TRUSS.
5. EDGE NAILING.
6. 2X FASCIA WITH (2) 16d NAILS EACH TRUSS.
7. SHEATHING MATERIAL AND ATTACHMENT AS OCCURS.
8. (2) 2X WOOD PLATE.
9. WOOD STUD WALL.
10. 2 X WOOD PLATE WITH 16d NAILS AT 12" O.C. AT LINTEL WHERE OCCURS.
11. WOOD BEAM/LINTEL WHERE OCCURS.
12. SIMPSON A35 AT 16" O.C.

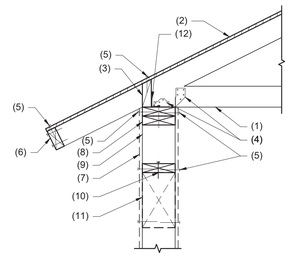

302 PREFABRICATED WOOD TRUSS AT WOOD STUD WALL
SCALE: NTS

NOTES:

1. PLYWOOD SHEATHING.
2. PREFABRICATED WOOD TRUSS.
3. EDGE NAILING.
4. HANGER PER TRUSS MANUFACTURER.
5. WOOD GIRDER TRUSS.
6. 2X WOOD BLOCKING.
7. SIMPSON VCTR TRUSS CLIP AT 32" O.C. MAX.
8. OVERFRAMING BY TRUSS MANUFACTURER.
9. (3) 16d NAILS EACH BLOCK.

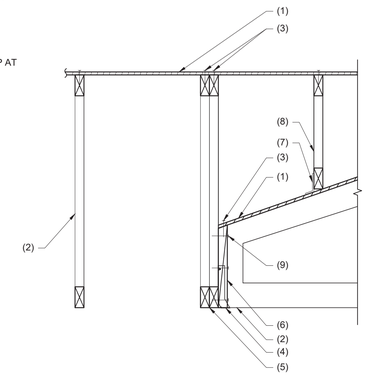

303 PREFABRICATED WOOD TRUSS AT GIRDER TRUSS
SCALE: NTS

NOTES:

1. CONCRETE SLAB WHERE SHOWN ON PLAN OR FINISHED GRADE.
2. DEPTH PER ARCHITECTURAL.
3. CONCRETE WALL.
4. BRICK VENEER PER ARCH.
5. STEEL BEAM.
6. WALL REINFORCING PER DETAIL 104.
7. STEEL PLATE 3/4" X 12" X 12" (LSV) WITH (4) 3/4" DIA.(GR.55) x 5" LONG HEADED STUDS.
8. SHEATHING MATERIAL AND ATTACHMENT AS OCCURS.
9. WOOD STUD WALL.
10. 2X CONTINUOUS WOOD PLATE AND 5/8" DIA. HILTI KWIK HUS-EZ AT 24" O.C.

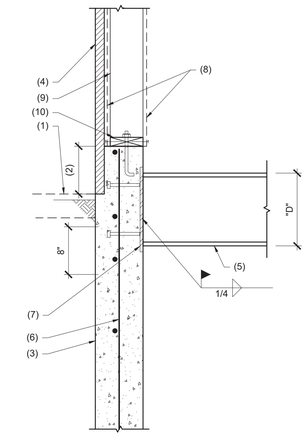

304 STEEL BEAM AT CONCRETE PANEL
SCALE: NTS

NOTES:

1. CONCRETE WALL.
2. CONCRETE SLAB OVER STEEL DECK. FOR DIRECTION OF DECK, SEE PLAN.
3. CONTINUOUS STEEL LEDGER AND ATTACHMENT PER SCHEDULE.
4. FINISHED GRADE OR CONCRETE SLAB AS OCCURS.
5. WALL BEYOND.
6. DEPTH PER ARCHITECTURAL.
7. WALL REINFORCING PER DETAIL 104.

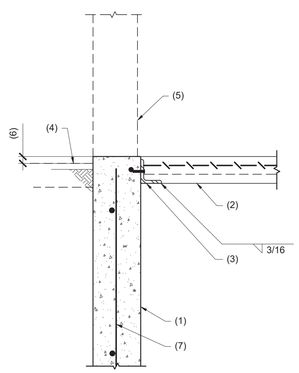

305 STEEL DECK TO CONCRETE WALL
SCALE: NTS --

NOTES:

1. STEEL BEAM.
2. CONCRETE OVER STEEL DECK, FOR DIRECTION OF DECK, SEE PLANS.
3. WELD ANGLE TO BEAM - TYP.
4. 2" TYPICAL.
5. 2'-0" MIN.
6. REINFORCING WHERE REQUIRED.
7. 0" TO 6" NO REINFORCING REQUIRED, 6" TO 12" ADD #4 REINFORCING AT 12" O.C., 12" TO 18" ADD #5 REINFORCING AT 12" O.C.
8. 1/4" CONTINUOUS BENT STEEL PLATE.

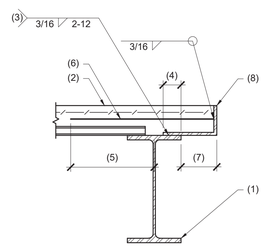

TYPICAL NOTES:

- SHORE PLATE UNTIL CONCRETE REACHES DESIGN STRENGTH WHERE 1/4" BENT PLATE EXCEEDS 6" IN LENGTH.

306 STEEL DECK AT STEEL BEAM
SCALE: NTS --

BRAMIC DESIGN GROUP PLLC
8003 S. GALILEO LN.
TUCSON, AZ 85747
PHONE: (520) 401-9183

COPYRIGHT NOTICE
This drawing is the property of the above referenced Professional and is not to be used for any purpose other than the specific project and site names herein, and cannot be reproduced in any manner without the express written permission from the Professional.

DATE	ISSUE
05.17.24	ISSUED FOR PERMIT REVIEW SET
07.08.24	TITLE BLOCK UPDATE

DATE	REVISION

PROFESSIONAL SEAL

PROFESSIONAL IN CHARGE
JSR

PROJECT MANAGER
GW

QUALITY CONTROL
JSR

DRAWN BY
GS

PROJECT ADDRESS
2920 S. PARK AVE
TUCSON ARIZONA 85713

VALVOLINE INSTANT OIL CHANGE

BDG PROJECT NUMBER
23-849

SHEET NAME
ROOF FRAMING DETAILS

SHEET #
S5.1

ennovative.
Unsealed drawings shall be considered preliminary designs and shall not be used for construction or final bidding.

These drawings are copyrighted by ennovative. LLC. Drawings shall not be reused or reproduced, whole or in part, without the written consent of ennovative. LLC. ©

JOB: 23073

STONE- HARDIE PANEL OPTION

MECHANICAL KEYNOTES

1. EXTEND 18"x14" SUPPLY DUCT FROM FLOOR ABOVE.
2. SUPPLY GRILLE TO BE INSTALLED LEVEL WITH THE BOTTOM OF STRUCTURE.
3. PROVIDE AIR FLOW SWITCH IN PIT EXHAUST DUCTWORK IN ACCESSIBLE LOCATION. SEE ELECTRICAL DRAWINGS FOR CONTROL DIAGRAM AND SEQUENCE OF OPERATIONS. AIR SWITCH TO BE CLEVELAND CONTROLS MODEL #AFS-222 OR EQUAL.
4. 12"x22" EXHAUST DUCT UP IN CHASE TO UPPER LEVEL.
5. TERMINATE EXHAUST DUCTWORK WITH WALL MOUNTED 20"x20" EXHAUST GRILLE LOCATED WITHIN 12" AFF.

Chvac - Full Commercial HVAC Loads Calculation Program — Elite Software Development, Inc.
KC Mechanical Engineering — Valvoline
Tucson, AZ 85711

Air Handler #1 - FC-1 - Total Load Summary

Air Handler Description: FC-1 Constant Volume - Sum of Peaks
Sensible Heat Ratio: 0.83 — --- This system occurs 1 time(s) in the building. ---

Air System Peak Time: 3pm in September. Method for finding peak time: Adjusted (based on percent sensible capacity)
Outdoor Conditions: Clg: 110° DB, 66° WB, 34.84 grains, Htg: 28° DB
Indoor Conditions: Clg: 75° DB, 50% RH, Htg: 75° DB

Summer: Ventilation controls outside air, ----- Winter: Ventilation controls outside air.

Room Space sensible loss:	5,676 Btuh		
Infiltration sensible loss:	0 Btuh	0 CFM	
Outside Air sensible loss:	6,936 Btuh	150 CFM	
Supply Duct sensible loss:	299 Btuh		
Return Duct sensible loss:	0 Btuh		
Return Plenum sensible loss:	0 Btuh		
Total System sensible loss:			12,911 Btuh
Heating Supply Air: 5,975 / (.911 X 1.08 X 20) =		304 CFM	
Winter Vent Outside Air (49.4% of supply) =		150 CFM	
Room space sensible gain:	12,963 Btuh		
Infiltration sensible gain:	0 Btuh		
Draw-thru fan sensible gain:	0 Btuh		
Supply duct sensible gain:	733 Btuh		
Reserve sensible gain:	107 Btuh		
Total sensible gain on supply side of coil:			13,803 Btuh
Cooling Supply Air: 13,928 / (.911 X 1.1 X 19) =		732 CFM	
Summer Vent Outside Air (20.5% of supply) =		150 CFM	
Return duct sensible gain:	0 Btuh		
Return plenum sensible gain:	0 Btuh		
Outside air sensible gain:	5,261 Btuh	150 CFM	
Blow-thru fan sensible gain:	0 Btuh		
Total sensible gain on return side of coil:			5,261 Btuh
Total sensible gain on air handling system:			19,063 Btuh
Room space latent gain:	2,805 Btuh		
Infiltration latent gain:	0 Btuh		
Outside air latent gain:	-3,366 Btuh		
Total latent gain on air handling system:			-561 Btuh
Total system sensible and latent gain:			18,502 Btuh

Check Figures

Total Air Handler Supply Air (based on a 19° TD):	732 CFM
Total Air Handler Vent. Air (20.50% of Supply):	150 CFM
Total Conditioned Air Space:	325 Sq.ft
Supply Air Per Unit Area:	2.2510 CFM/Sq.ft
Area Per Cooling Capacity:	153.4 Sq.ft/Ton
Cooling Capacity Per Area:	0.0065 Tons/Sq.ft
Heating Capacity Per Area:	39.73 Btuh/Sq.ft
Total Heating Required With Outside Air:	12,911 Btuh
Total Cooling Required With Outside Air:	2.12 Tons

Note: Tonnages are 'adjusted' tons, based on percent sensible capacity of the air handler.
Note: Due to the system's negative latent gain, tonnage is based solely on sensible gain.

Chvac - Full Commercial HVAC Loads Calculation Program — Elite Software Development, Inc.
KC Mechanical Engineering — Valvoline
Tucson, AZ 85711

Air Handler #2 - FC-2 - Total Load Summary

Air Handler Description: FC-2 Constant Volume - Sum of Peaks
Sensible Heat Ratio: 1.10 — --- This system occurs 1 time(s) in the building. ---

Air System Peak Time: 3pm in September. Method for finding peak time: Adjusted (based on percent sensible capacity)
Outdoor Conditions: Clg: 110° DB, 66° WB, 34.84 grains, Htg: 28° DB
Indoor Conditions: Clg: 75° DB, 50% RH, Htg: 75° DB

Summer: Exhaust controls outside air, ----- Winter: Exhaust controls outside air.

Room Space sensible loss:	0 Btuh		
Infiltration sensible loss:	0 Btuh	0 CFM	
Outside Air sensible loss:	0 Btuh	0 CFM	
Supply Duct sensible loss:	0 Btuh		
Return Duct sensible loss:	0 Btuh		
Return Plenum sensible loss:	0 Btuh		
Total System sensible loss:			0 Btuh
Heating Supply Air: 0 / (.911 X 1.08 X 0) =		0 CFM	
Winter Vent Outside Air (0.0% of supply) =		0 CFM	
Room space sensible gain:	8,419 Btuh		
Infiltration sensible gain:	1,929 Btuh		
Draw-thru fan sensible gain:	0 Btuh		
Supply duct sensible gain:	575 Btuh		
Reserve sensible gain:	0 Btuh		
Total sensible gain on supply side of coil:			10,923 Btuh
Cooling Supply Air: 10,923 / (.911 X 1.1 X 19) =		574 CFM	
Summer Vent Outside Air (0.0% of supply) =		0 CFM	
Return duct sensible gain:	0 Btuh		
Return plenum sensible gain:	0 Btuh		
Outside air sensible gain:	0 Btuh	0 CFM	
Blow-thru fan sensible gain:	0 Btuh		
Total sensible gain on return side of coil:			0 Btuh
Total sensible gain on air handling system:			10,923 Btuh
Room space latent gain:	0 Btuh		
Infiltration latent gain:	-1,010 Btuh		
Outside air latent gain:	0 Btuh		
Total latent gain on air handling system:			-1,010 Btuh
Total system sensible and latent gain:			9,913 Btuh

Check Figures

Total Air Handler Supply Air (based on a 19° TD):	574 CFM
Total Air Handler Vent. Air (0.00% of Supply):	0 CFM
Total Conditioned Air Space:	45 Sq.ft
Supply Air Per Unit Area:	12.7496 CFM/Sq.ft
Area Per Cooling Capacity:	37.1 Sq.ft/Ton
Cooling Capacity Per Area:	0.0270 Tons/Sq.ft
Heating Capacity Per Area:	0.00 Btuh/Sq.ft
Total Heating Required With Outside Air:	0 Btuh
Total Cooling Required With Outside Air:	1.21 Tons

Note: Tonnages are 'adjusted' tons, based on percent sensible capacity of the air handler.
Note: Due to the system's negative latent gain, tonnage is based solely on sensible gain.

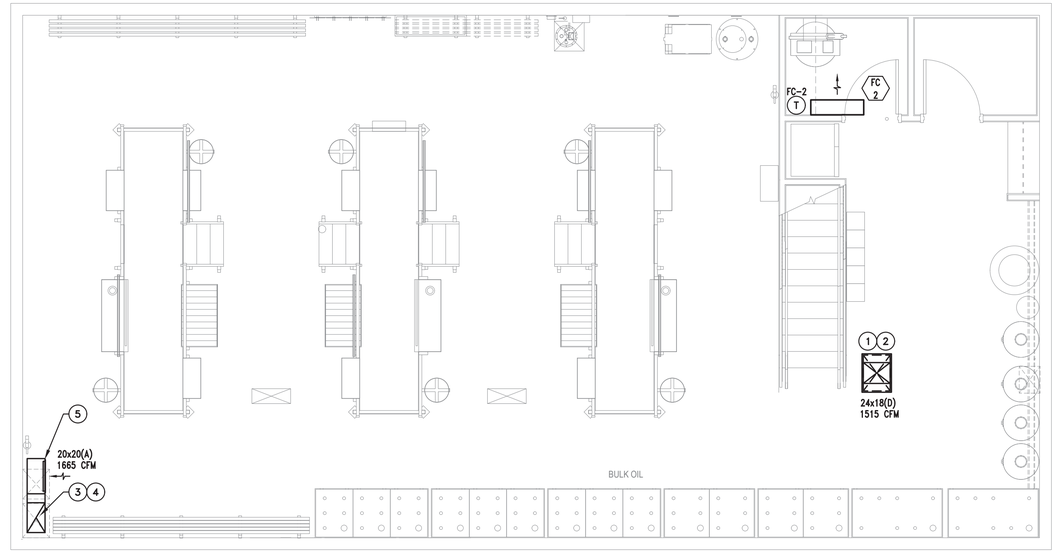

1 / M-1.0 MECHANICAL PLAN - LOWER LEVEL
Scale: 1/4" = 1'-0"

COMcheck Software Version COMcheckWeb

Mechanical Compliance Certificate

Project Information

Energy Code:	2018 IECC
Project Title:	
Location:	Tucson, Arizona
Climate Zone:	2b
Project Type:	New Construction

Construction Site: Owner/Agent: Designer/Contractor:

Additional Efficiency Package(s)
Credits: 1.0 Required 1.0 Proposed
Reduced Lighting Power, 1.0 credit

Mechanical Systems List

Quantity System Type & Description

1 FC/CU - 1 (Single Zone):
Split System Heat Pump
Heating Mode: Capacity = 26 kBtuh,
Proposed Efficiency = 8.50 HSPF, Required Efficiency = 8.20 HSPF
Cooling Mode: Capacity = 28 kBtuh,
Proposed Efficiency = 14.00 SEER, Required Efficiency = 14.00 SEER
Proposed Part Load Efficiency = 0.00 , Required Part Load Efficiency = 0.00

1 FC/CU - 2 (Single Zone):
Cooling: 1 each - Split System, Capacity = 18 kBtuh, Air-Cooled Condenser, Unknown Economizer
Proposed Efficiency = 19.80 SEER, Required Efficiency = 13.00 SEER
Proposed Part Load Efficiency = 0.00 , Required Part Load Efficiency = 0.00

Mechanical Compliance Statement

Compliance Statement: The proposed mechanical design represented in this document is consistent with the building plans, specifications, and other calculations submitted with this permit application. The proposed mechanical systems have been designed to meet the 2018 IECC requirements in COMcheck Version COMcheckWeb and to comply with any applicable mandatory requirements listed in the Inspection Checklist.

Name - Title _____ Signature _____ Date _____

Project Title: Report date: 05/20/24
Data filename:

LOWER LEVEL EXHAUST CALCULATIONS

CALCULATIONS TO COMPLY WITH NEC 511-3b FOR (6) AIR CHANGES PER HOUR.

1665 SF x 7.88' x 6 / 60 = 1315 CFM REQUIRED

MORE STRINGENT NFPA 30A FOR 1 CFM/SF.
1665 SF x 1 = 1665 CFM REQUIRED. USE 1665 CFM.

KC MECHANICAL ENGINEERING, L.L.C.
5447 East Fifth Street # 112 — 520/327-7611
Tucson, Arizona 85711 — 520/327-0432
Designers Mech: LAB Plumb: ROM Project #: 23-359

STONE- HARDIE PANEL OPTION

BRAMIC DESIGN GROUP PLLC
8003 S. GALILED LN.
TUCSON, AZ 85747
PHONE: (520) 401-9183

COPYRIGHT NOTICE
This drawing is the property of the above referenced Professional and is not to be used for any purpose other than the specific project and site names herein, and cannot be reproduced in any manner without the express written permission from the Professional.

DATE	ISSUE
05.17.24	ISSUED FOR PERMIT REVIEW SET

DATE	REVISION
1 07/08/24	COT COMMENTS

PROFESSIONAL SEAL
25035 KENNETH M. CAWTHORNE
ARIZONA U.S.A.
Expires 6/30/2026

PROFESSIONAL LICENSE NO:
ARIZONA 15939
CERTIFICATE OF AUTHORIZATION NO:

PROFESSIONAL IN CHARGE
GENE GOLDSTEIN

PROJECT MANAGER
KYLE VILAUBI

QUALITY CONTROL
KYLE VILAUBI, GENE GOLDSTEIN

DRAWN BY
KYLE VILAUBI / JON WADE

PROJECT ADDRESS
2920 S. PARK AVE
TUCSON ARIZONA 85713

Valvoline Instant Oil Change

VALVOLINE INSTANT OIL CHANGE

BDG PROJECT NUMBER
23-849

SHEET NAME
MECHANICAL PLAN - LOWER LEVEL

SHEET #
M-1.1

MECHANICAL KEYNOTES

1. EF-1 IN CEILING. PROVIDE FLEXIBLE CONNECTION AT FAN. FAN SHALL BE INTERLOCKED WITH RESTROOM LIGHTS. INTERLOCK BY E.C.
2. EXTEND 8" EXHAUST AIR DUCT UP THROUGH ROOF TO VENT CAP. MAINTAIN 10'-0" MIN. TO OUTSIDE AIR INTAKE.
3. 18"x14" UP TO ROOFTOP INTAKE VENTILATOR GREENHECK MODEL GRSI-16 OR EQUAL. INTAKE @ 1515 CFM W/ 18"x14" DUCT TRANSITION TO FRESH AIR DUCT CONNECTION. PROVIDE FLEXIBLE CONNECTION TO FAN. PROVIDE TURNING VANES AT ELBOWS.
4. TRANSFER FAN TF-1, HANG FROM STRUCTURE ABOVE WITH UNISTRUT, THREADED RODS AND VIBRATION ISOLATION PROTECTION. PROVIDE FLEXIBLE CONNECTORS. TF-1 SHALL BE INTERLOCKED WITH EF-2. SEE ELECTRICAL DRAWINGS FOR CONTROL DIAGRAM AND SEQUENCE OF OPERATIONS. INTERLOCK BY E.C.
5. 18"x14" SUPPLY AIR DUCT DOWN THROUGH CHASE TO LOWER LEVEL BELOW.
6. 16"x16" UP TO ROOFTOP EXHAUST VENTILATOR. VENTILATOR SHALL BE GREENHECK MODEL #GRSR-16 OR EQUAL. MAINTAIN 10'-0" MIN. TO OUTSIDE AIR INTAKE. PROVIDE AND INSTALL GRAVITY BACKDRAFT DAMPER.
7. INLINE FAN MOUNTED IN TRUSS SPACE PER MANUFACTURERS INSTRUCTIONS. PROVIDE FLEXIBLE CONNECTORS AT DUCT CONNECTIONS. INLINE FAN HUNG FROM STRUCTURE WITH UNISTRUT AND THREADED RODS WITH VIBRATION ISOLATORS.
8. UPPER LEVEL EXHAUST FAN EF-3, SHALL BE INTERLOCKED WITH LOWER LEVEL EXHAUST FAN EF-2, TO RUN DURING OCCUPIED HOURS, SEE ELECTRICAL DRAWINGS FOR CONTROL DIAGRAM AND SEQUENCE OF OPERATIONS. INTERLOCK BY E.C.
9. TERMINATE EXHAUST DUCTWORK WITH 16"x16"(A) EXHAUST GRILLE IN CEILING.
10. EF-2 FAN MOTOR SHALL BE INTERLOCKED WITH PIT LIGHTING SWITCH, SEE ELECTRICAL DRAWINGS FOR CONTROL DIAGRAM AND SEQUENCE OF OPERATIONS. INTERLOCK BY E.C.
11. COORDINATE FINAL LOCATION AND SIZE OF DIFFUSER WITH STRUCTURAL DRAWINGS AND FRAMING.
12. 12"x22" EXHAUST DUCT UP IN CHASE FROM LOWER LEVEL BELOW.
13. PROVIDE AIR FLOW SWITCH IN PIT EXHAUST DUCTWORK IN ACCESSIBLE LOCATION. SEE ELECTRICAL DRAWINGS FOR CONTROL DIAGRAM AND SEQUENCE OF OPERATIONS. AIR SWITCH TO BE CLEVELAND CONTROLS MODEL #AFS-222 OR EQUAL.
14. THERMOSTAT WIRING IN 1/2" CONDUIT. CONDUIT BY E.C. ALL T-STATS TO BE LOW VOLTAGE PROGRAMMABLE STATS MOUNTED AT 48" AFF, TYPICAL.
15. ROUTE EXHAUST DUCT UP THEN ROUTE HORIZONTAL ABOVE SERVICE BAY CEILING.
16. HIGH VOLUME, LOW SPEED (HVLS) FAN EQUAL OF HUNTER ECO, 8'#, VFD W/ DIRECT DRIVE, 156 RPM, 6.5 AMPS, 208/1/60, 100 LBS. SECURE TO STRUCTURE PER MANUFACTURER REQUIREMENTS. PROVIDE (1) 350 SERIES HVLS FAN CONTROLLER TO CONTROL BOTH FANS.
17. HVLS FAN CONTROLLER EQUAL OF HUNTER 350 SERIES.
18. RADIANT HEATER, MOUNT TO ROOF STRUCTURE. ENSURE PROPER CLEARANCE FROM GARAGE DOORS, HVLS FANS AND COMBUSTIBLE MATERIALS PER MANUFACTURERS INSTALLATION INSTRUCTIONS. RH-3 SHALL BE TILTED TOWARDS THE PIT OPENING. RH-1 AND RH-2 SHALL BE LEVEL.
19. 8"# O.A. INTAKE UP TO GOOSENECK ON ROOF WITH BIRD/RODENT SCREEN, 150 CFM. ROUTE TO REAR ROOF SLOPE, REFER TO ARCHITECTURAL ROOF PLAN.
20. FLOOR MOUNT FAN COIL ON ANGLE IRON STAND. SEE DETAIL 1/M2.1.
21. PROVIDE 1 THERMOSTAT TO CONTROL RH-1, RH-2, AND RH-3.

MECHANICAL LEGEND

DESCRIPTION	SYMBOL
SUPPLY AIR DIFFUSER	OR
RETURN AIR GRILLE	OR
CEILING EXHAUST FAN	
ROOF MOUNTED EXHAUST FAN	
LINED DUCTWORK (UNLESS NOTED OTHERWISE)	
BRANCH TAKE-OFF WITH 45° TAP	
RECTANGULAR ELBOW WITH TURNING VANES	
90° ELBOW DOWN / UP	OR
DUCT RISER	
MANUAL BALANCING DAMPER	
SPIN IN COLLAR WITH BALANCING DAMPER	
ROUND FLEXIBLE DUCT	
THERMOSTAT	T
PROGRAMMABLE TIME CLOCK	TC
WALL CONTROLLER	C

NOTE: SOME SYMBOLS MAY NOT APPLY TO THIS PROJECT

MECHANICAL GENERAL NOTES

1. COORDINATE ALL MECHANICAL WORK WITH ALL OTHER TRADES. VERIFY ALL EXISTING CONDITIONS BEFORE THE START OF WORK.
2. LINE ALL RECTANGULAR AIR CONDITIONING DUCTWORK WITH 1" THICK DUCT LINER PER SPECIFICATIONS. ALL ROUND AIR CONDITIONING DUCTWORK NOT INTERNALLY LINED SHALL BE EXTERNALLY WRAPPED WITH INSULATION AS PER SPECIFICATIONS.
3. ALL DUCT ELBOWS SHALL BE MITERED WITH SINGLE THICKNESS TURNING VANES UNLESS INSTRUCTED OTHERWISE ON DRAWINGS. PROVIDE 45 DEGREE ENTRY FITTINGS AT BRANCH DUCT CONNECTIONS TO DUCT MAINS. FLEXIBLE DUCTS SHALL BE INSTALLED TO MAINTAIN FULL CROSS-SECTIONAL FREE AREA. PROVIDE RIGID SHEET METAL ELBOWS OR LINED PLENUM BOXES AT AIR DEVICES WHEN REQUIRED.
4. COORDINATE EXACT LOCATION OF ALL AIR DEVICES WITH ARCHITECTURAL REFLECTED CEILING PLAN.
5. ROUTE ALL CONDENSATE DRAIN LINES AS INDICATED ON DRAWINGS. PROVIDE MINIMUM SLOPE OF 1/8" PER 1'-0". SEE PLUMBING DRAWINGS.
6. SUPPORT HEAT PUMP CONDENSING UNITS ON PLATFORM. EXACT LOCATION SHALL INSURE ADEQUATE CLEARANCE FOR SERVICING AND FOR AIR CIRCULATION.
7. ROUTE REFRIGERANT PIPING BETWEEN FAN COIL UNIT AND HEAT PUMP CONDENSING UNIT CONCEALED IN FINISHED SPACES. SEAL ALL WALL PENETRATIONS WEATHERTIGHT. PROVIDE PVC PIPE SLEEVE FOR UNDERGROUND REFRIGERANT PIPING. REFRIGERANT PIPING SIZES SHALL BE FOR MANUFACTURER'S INSTALLATION INSTRUCTIONS (BASED ON THE ACTUAL LOCATIONS AND ELEVATIONS OF EQUIPMENT).
8. ROUTE DUCTS FROM TOILET EXHAUST FANS TO ROOF CAPS. CONCEAL DUCTWORK. ROOF CAPS SHALL BE FLASHED WEATHERTIGHT. OFFSET EXHAUST DISCHARGE AS REQUIRED INSURING A MINIMUM 10'-0" CLEARANCE FROM ALL OUTSIDE AIR INTAKES.
9. ALL LOW VOLTAGE CONTROL WIRING AND ITS INSTALLATION TO BE BY MECHANICAL CONTRACTOR. INSTALL PER ELECTRICAL SPECIFICATIONS. MOUNTING HEIGHT OF THERMOSTATS SHALL BE PER ADA REQUIREMENTS.
10. MECHANICAL CONTRACTOR SHALL REVIEW ALL ELECTRICAL DRAWINGS BEFORE PURCHASING EQUIPMENT TO INSURE THAT PROPER ELECTRICAL SERVICE IS TO BE PROVIDED FOR ALL NEW EQUIPMENT.

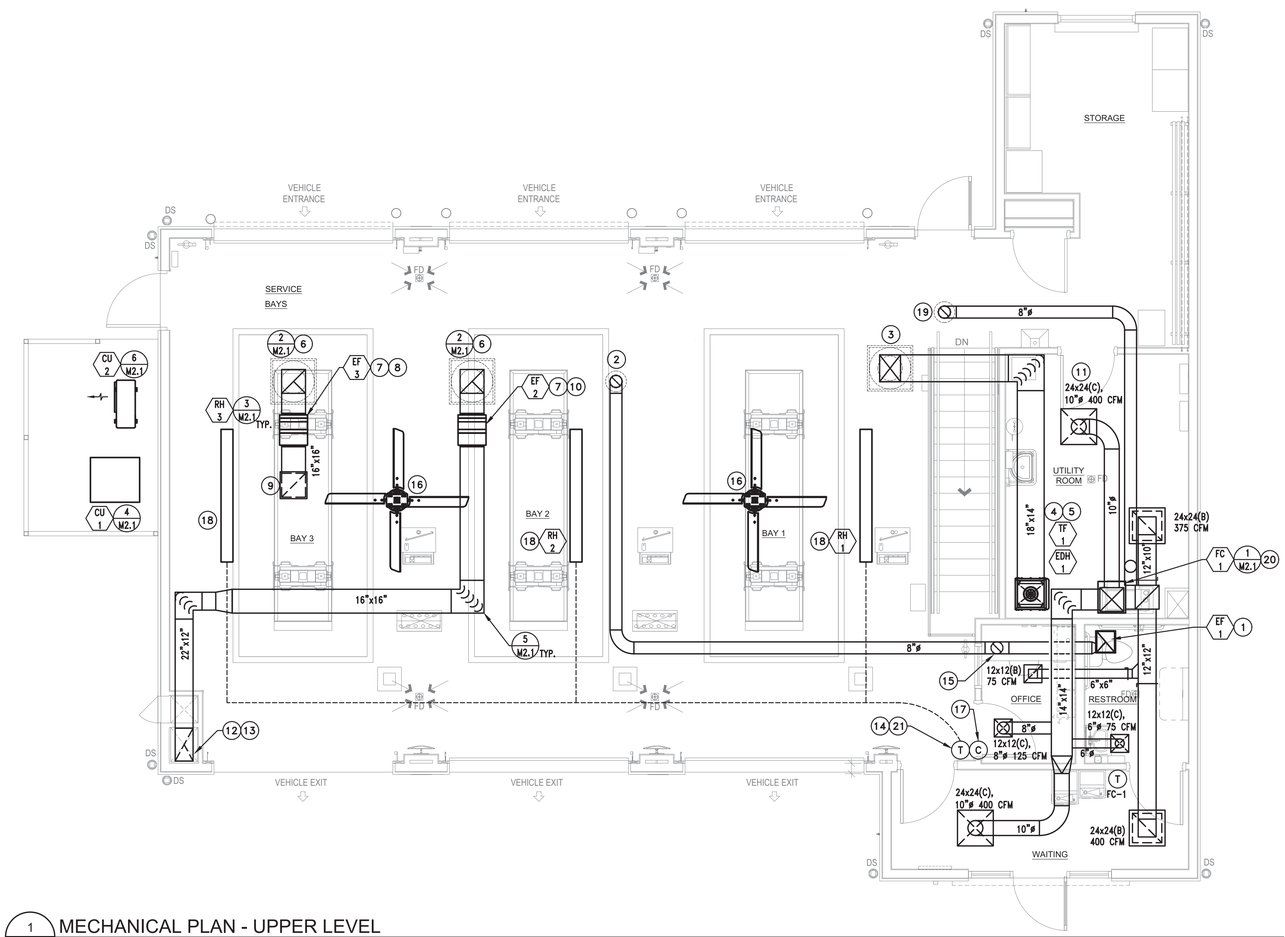

1 / M-1.1 MECHANICAL PLAN - UPPER LEVEL
Scale: 1/4" = 1'-0"

UPPER LEVEL EXHAUST CALCULATIONS

CALCULATIONS TO COMPLY WITH IMC SECTION 403.3 FOR REPAIR GARAGES 0.75 CFM/SF

1510 SF x 0.75 CFM/SF = 1135 CFM REQUIRED

KC MECHANICAL ENGINEERING, L.L.C.
5447 East Fifth Street # 112 520/327-7611
Tucson, Arizona 85711 520/327-0432
Designers Mech: LAB Plumb: ROM Project #: 23-359

STONE- HARDIE PANEL OPTION

BRAMIC DESIGN GROUP PLLC
8003 S. GALILEO LN.
TUCSON, AZ 85747
PHONE: (520) 401-9183

COPYRIGHT NOTICE
This drawing is the property of the above referenced Professional and is not to be used for any purpose other than the specific project and site names herein, and cannot be reproduced in any manner without the express written permission from the Professional.

DATE	ISSUE
05.17.24	ISSUED FOR PERMIT REVIEW SET

DATE	REVISION
1 07/08/24	COT COMMENTS

PROFESSIONAL SEAL

REGISTERED PROFESSIONAL ENGINEER (MECHANICAL) 25035 KENNETH M. CAWTHORNE DATE SIGNED 7/12/24 ARIZONA, U.S.A. Expires 6/30/2024

PROFESSIONAL LICENSE NO:
ARIZONA 15939
CERTIFICATE OF AUTHORIZATION NO:

PROFESSIONAL IN CHARGE
GENE GOLDSTEIN

PROJECT MANAGER
KYLE VILAUBI

QUALITY CONTROL
KYLE VILAUBI, GENE GOLDSTEIN

DRAWN BY
KYLE VILAUBI / JON WADE

PROJECT ADDRESS
1 2920 S. PARK AVE
TUCSON ARIZONA 85713

Valvoline Instant Oil Change

VALVOLINE INSTANT OIL CHANGE

BDG PROJECT NUMBER
23-849

SHEET NAME
MECHANICAL PLAN - UPPER LEVEL

SHEET #
M-1.2

CONDENSING UNIT SCHEDULE		
MARK	CU-1	CU-2
TYPE	HEAT PUMP	COOLING ONLY
NOMINAL CAPACITY (TONS)	2.5	1.5
MATCHING FAN COIL UNIT MARK	FC-1	FC-2
COOLING AMBIENT TEMPERATURE (°F DB)	110	110
MINIMUM SEASONAL ENERGY EFFICIENCY RATIO (SEER2)	14.8	20.2
MINIMUM HEATING SEASON PERFORMANCE FACTOR (HSPF2)	7.8	10.7
MAXIMUM OPERATING WEIGHT (LBS)	200	125
APPROX. BASE REFRIGERANT CHARGE (LBS)	6.1	4.9
VOLTS/PHASE/HZ	208/1/60	208/1/60
UNIT MCA	15	11
UNIT MOCP	25	15
REFERENCE	TRANE 4TWR5030	MITSUBISHI PUY-A18NKA7
NOTES	1-6	1-6

1. CAPACITY OF UNIT SHALL BE AS SCHEDULE FOR MATCHING FAN COIL UNIT.
2. PROVIDE ALL FEATURES STANDARD TO THE UNIT SCHEDULED. FAN RELAY, LIQUID LINE FILTER DRIER, ANTI-RECYCLING CONTROL (TO PREVENT RAPID COMPRESSOR RECYCLING) & START RELAY/CAPACITOR KIT (FOR EASY STARTING).
3. PROVIDE LOW AMBIENT CONTROL TO 30°F.
4. PROVIDE 5 YEAR COMPRESSOR WARRANTY.
5. MOUNT ON DOUBLE DEFLECTION RIS ISOLATORS EQUAL OF MASON ND.
6. PROVIDE LOCKING ACCESS PORT CAPS.

FAN COIL UNIT SCHEDULE		
MARK	FC-1	FC-2
MATCHING CONDENSING UNIT MARK	CU-1	CU-2
TYPE	MULTI-POSITION AIR HANDLER	HIGHWALL
MINIMUM TOTAL COOLING CAPACITY (MBH)	24.5	12
MINIMUM SENSIBLE COOLING CAPACITY (MBH)	22	12
ENTERING AIR TEMPERATURE (°F DB/WB)	80/62	85/62
MINIMUM HEATING CAPACITY (MBH)	20	–
SUPPLY AIR (CFM)	1000	265-455
MINIMUM OUTSIDE AIR (CFM)	150	–
EXTERNAL STATIC PRESSURE (IN W.G.)	0.5	–
DRIVE TYPE	DIRECT	DIRECT
VOLTS/PHASE/HZ	208/1/60	208/1/60
UNIT FLA	2.8	–
UNIT MCA	4	–
UNIT MOCP	15	–
MAXIMUM OPERATING WEIGHT (LBS)	175	35
REFERENCE	TRANE TEM4A0B31M31	MITSUBISHI PKA-A18LA
NOTES	1 - 6	1,2,4,5,7,8

1. SCHEDULE CAPACITY SHALL BE FOR 2500 FT. ELEVATION.
2. PROVIDE ALL NECESSARY INTERCONNECTING PIPING (& REFRIGERANT ACCESSORIES) & CONTROL WIRING BETWEEN FAN COIL UNIT & MATCHING CONDENSING UNIT.
3. FAN COIL UNIT SHALL HAVE SINGLE POINT POWER CONNECTION.
4. REFRIGERANT PIPING SHALL BE SIZED PER MANUFACTURER'S RECOMMENDATIONS FOR LONG LENGTH APPLICATIONS.
5. MANUFACTURER SHALL PROVIDE ALL NECESSARY DEVICES, VALVES, ETC. AS REQUIRED FOR THIS APPLICATION.
6. PROVIDE 7-DAY PROGRAMMABLE THERMOSTAT WITH LOCKABLE COVER.
7. INDOOR UNIT POWERED FROM MATCHING OUTDOOR UNIT.
8. PROVIDE WIRED CONTROLLER.

AIR DEVICE SCHEDULE				
MARK	A	B	C	D
SERVICE	EXHAUST	RETURN	SUPPLY	SUPPLY
MATERIAL	ALUM	ALUM	ALUM	ALUM
FINISH	WHITE	WHITE	WHITE	WHITE
PATTERN	SINGLE DEFLECTION	EGGCRATE	4-WAY	DOUBLE DEFLECTION
REFERNCE	TITUS 55FL	TITUS 50F	TITUS OMNI-AA	TITUS 272FL
NOTES	1,2	2	1,2,3	1,2

1. PROVIDE OPPOSED BLADE DAMPER.
2. PROVIDE FRAME STYLE SUITABLE FOR CEILING OR WALL SPECIFIED ON ARCH. DRAWINGS.
3. PROVIDE SQUARE TO ROUND ADAPTORS WHEN REQUIRED.

OUTDOOR AIR CALCULATION - ASHRAE 62.1-2022

BUILDING UNIT	ROOM NUM.	ROOM NAME	ZONE FLOOR AREA Az (SQ.FT.)	OCCUPANCY CATEGORY, Ra, Rp	ZONE POPULATION Pz	ZONE AIR DISTRIBUTION EFFECTIVENESS Ez	ZONE SUPPLY AIR FLOW Vpz (CFM)	SYSTEM POPULATION Ps	OUTDOOR AIR INTAKE Vot (CFM)	UNIT (WC OR URINAL) (UNIT)	REQUIRED EXHAUST VENTILATION (CFM)	NOTES
FC-1		WAITING ROOM	90	MAIN ENTRY LOBBIES	0.9		400				0	
		RESTROOM	45	TOILETS - CONTINUOUS	0.0		75			1	50	
		UTILITY ROOM	150	OCCUPIABLE STORAGE ROOMS (DRY MATERIALS)	0.3		400				0	
		OFFICE	40	OFFICE SPACE	0.2		125				0	
			325		1.4	CSCR	1,000	1	24		50	

FAN SCHEDULE

NOTES:
1. BACKDRAFT DAMPER
2. FAN SPEED CONTROLLER
3. TIME DELAY SWITCH
4. TERMINATE WITH ROOF CAP
5. RC-75 SET (4) - ISOLATORS
6. EC MOTOR
7. INLET & OUTLET FLEXIBLE CONNECTIONS
8. HANGING SPRING ISOLATION

TAG	MANUFACTURER	MODEL	AREA SERVED	LOCATION	CFM	ESP	FAN TYPE	DRIVE TYPE	SONES	RPM	HP	ELECTRICAL VOLTAGE	ELECTRICAL PHASE	WEIGHT	NOTES
EF-1	COOK	GEMINI GC-148	TOILET ROOM	CEILING MOUNTED	100 CFM	0.38 in-wg	CABINET	DIRECT	2.0	970	FRACT.	120 V	1	21 LBS	1,2,3,4,5
EF-2	COOK	135SQN17D(VF)	PIT LEVEL	CEILING MOUNTED	1665 CFM	0.50 in-wg	INLINE CENT.	DIRECT	12.5	1354	1/2	120 V	1	105 LBS	2,6,7,8
EF-3	COOK	120SQN17D(VF)	SERVICE LEVEL	CEILING MOUNTED	1135 CFM	0.50 in-wg	INLINE CENT.	DIRECT	9.5	1500	1/4	120 V	1	75 LBS	2,6,7,8
TF-1	COOK	135SQN17D(VF)	PIT LEVEL	CEILING MOUNTED	1515 CFM	0.50 in-wg	INLINE CENT.	DIRECT	10.4	1344	1/2	120 V	1	105 LBS	2,6,7,8

FAN SCHEDULE (OPTIONAL ALTERNATE)

NOTES:
1. BACKDRAFT DAMPER
2. FAN SPEED CONTROLLER
3. TIME DELAY SWITCH
4. TERMINATE WITH ROOF CAP
5. RC-75 SET (4) ISOLATORS
6. EC MOTOR
7. INLET & OUTLET FLEXIBLE CONNECTIONS
8. HANGING SPRING ISOLATION

TAG	MANUFACTURER	MODEL	AREA SERVED	LOCATION	CFM	ESP	FAN TYPE	DRIVE TYPE	SONES	RPM	HP	ELECTRICAL VOLTAGE	ELECTRICAL PHASE	WEIGHT	NOTES
EF-1	GREENHECK	SP-B150	TOILET ROOM	CEILING MOUNTED	100 CFM	0.38 in-wg	CABINET	DIRECT	2.0	970	FRACT.	120 V	1	21 LBS	1,2,3,4,5
EF-2	GREENHECK	SQ-120-VG	PIT LEVEL	CEILING MOUNTED	1665 CFM	0.50 in-wg	INLINE CENT.	DIRECT	13.4	1722	1/2	120 V	1	72 LBS	2,6,7,8
EF-3	GREENHECK	SQ-100-VG	SERVICE LEVEL	CEILING MOUNTED	1100 CFM	0.50 in-wg	INLINE CENT.	DIRECT	10	1635	1/4	120 V	1	60 LBS	2,6,7,8
TF-1	GREENHECK	SQ-120-VG	PIT LEVEL	CEILING MOUNTED	1515 CFM	0.50 in-wg	INLINE CENT.	DIRECT	11.5	1725	1/2	120 V	1	72 LBS	2,6,7,8

ELECTRIC DUCT HEATER SCHEDULE

NOTES:
1. THERMOSTAT
2. CONTROL OPTION G

TAG	MANUFACTURER	MODEL	AREA SERVED	DUCT SIZE	ELECTRICAL KW	ELECTRICAL VOLTAGE	ELECTRICAL PHASE	STAGES	NOTES
EDH-1	INDEECO	QUA	PIT	18"x14"	10	208 V	3	2	1 & 2

RADIANT HEATER SCHEDULE	
MARK	RH-1, RH-2, RH-3
ENERGY SOURCE	ELECTRIC
OUTPUT (KW)	3.2
VOLTS/PHASE/HZ	240/1/60
UNIT AMPS	13.3
MAXIMUM OPERATING WEIGHT (LBS)	30
REFERENCE	SRP EW32L24
NOTES	1 - 4

1. UNIT HEATER PROVIDED SHALL BE UL LISTED.
2. PROVIDE CEILING MOUNT BRACKET
3. INSTALL UNIT HEATERS AS PER MANUFACTURER'S INSTRUCTIONS.
4. UNIT HEATERS TO BE CONTROLLED BY ONE THERMOSTAT, COORDINATE WITH ELECTRICAL.

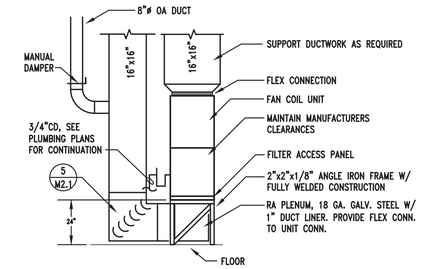

VERTICAL FAN COIL - FC C-1 (1 / M2.1)
NO SCALE

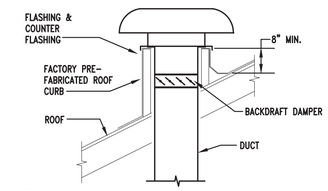

NOTES:

1. SECURE TO ROOF CURB USING LAG BOLTS, MINIMUM TWO PER SIDE, MAXIMUM 8" ON CENTER.

2. WHERE THERE IS INSULATION ABOVE ROOF, USE ROOF CURB DESIGNED TO ACCEPT INSULATION. MOUNT CURB ON ROOF SURFACE, NOT ON TOP OF INSULATION.

3. FOR PITCHED ROOFS, THE PRE-FABRICATED ROOF CURB SHALL BE DESIGNED SO THAT THE HOOD IS MOUNTED LEVEL.

ROOF MOUNTED WEATHERHOOD DETAIL (2 / M2.1)
NO SCALE

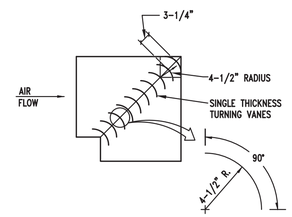

MITER ELBOW WITH TURNING VANES DETAIL (5 / M2.1)
NO SCALE

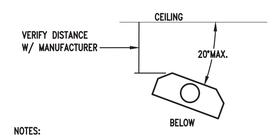

NOTES:

1. RADIANT HEATERS RH-1 AND RH-2 SHALL BE MOUNTED LEVEL. RH-3 SHALL BE MOUNTED TO TILT TOWARDS THE SERVICE BAY.

2. HEATERS SHALL BE MOUNTED IN ACCORDANCE WITH MFG. INSTRUCTIONS.

3. HEATERS SHALL BE CYCLED FROM THERMOSTAT AS SHOWN ON PLAN.

RADIANT HEATER DETAIL (3 / M2.1)
NO SCALE

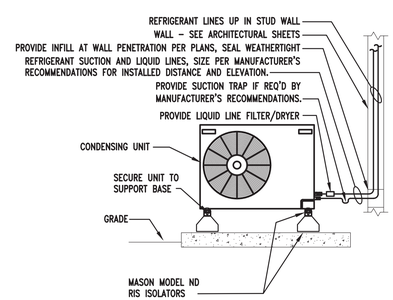

NOTE:
1. INSULATE SUCTION AND LIQUID LINES PER SPECS. PROVIDE 2-COATS OF MANUFACTURER'S INSULATION COATING FOR ALL EXTERIOR PIPING.
2. PROVIDE PIPING SUPPORTS AT MAXIMUM 6'-0"O.C.

MINI-SPLIT CONDENSING UNIT DETAIL (6 / M2.1)
NO SCALE

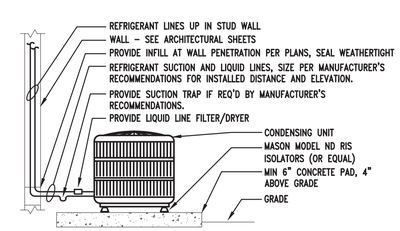

NOTE:
1. INSULATE SUCTION AND LIQUID LINES PER SPECS.
2. PROVIDE 2-COATS OF MANUFACTURER'S INSULATION COATING FOR ALL EXTERIOR PIPING.

CONDENSING UNIT DETAIL (4 / M2.1)
NO SCALE

KC MECHANICAL ENGINEERING, L.L.C.
5447 East Fifth Street # 112 520/327-7611
Tucson, Arizona 85711 520/327-0432
Designers Mech: LAB Plumb: ROM Project #: 23-359

STONE- HARDIE PANEL OPTION

BRAMIC DESIGN GROUP PLLC
8003 S. GALILEO LN.
TUCSON, AZ 85747
PHONE: (520) 401-9183

COPYRIGHT NOTICE
This drawing is the property of the above referenced Professional and is not to be used for any purpose other than the specific project and site names herein, and cannot be reproduced in any manner without the express written permission from the Professional.

DATE	ISSUE
05.17.24	ISSUED FOR PERMIT REVIEW SET

DATE	REVISION
1 07/08/24	COT COMMENTS

PROFESSIONAL SEAL

PROFESSIONAL LICENSE NO:
ARIZONA 15939
CERTIFICATE OF AUTHORIZATION NO:

PROFESSIONAL IN CHARGE
GENE GOLDSTEIN

PROJECT MANAGER
KYLE VILAUBI

QUALITY CONTROL
KYLE VILAUBI, GENE GOLDSTEIN

DRAWN BY
KYLE VILAUBI / JON WADE

PROJECT ADDRESS
1 2920 S. PARK AVE
TUCSON ARIZONA 85713

Valvoline Instant Oil Change
VALVOLINE INSTANT OIL CHANGE

BDG PROJECT NUMBER
23-849

SHEET NAME
MECHANICAL SCHEDULES & DETAILS

SHEET #
M-2.1

PLUMBING ABBREVATIONS

AAV	AIR ADMITTANCE VALVE	MAX	MAXIMUM
AFF	ABOVE FINISH FLOOR	MBH	1,000 BTU PER HOUR
AFG	ABOVE FINISH GRADE	MECH	MECHANICAL
APP'D	APPROVED	MIN	MINIMUM
A/C	ABOVE CEILING	M.C.	MECHANICAL CONTRACTOR
A/G	ABOVE GRADE	OC	ON CENTER
BLDG	BUILDING	O/H	OVERHEAD
B/G	BELOW GRADE	OPD	OVERPRESSURE DEVICE
BFF	BELOW FINISH FLOOR	OSAN	OIL LADEN SANITARY
BFP	BACKFLOW PREVENTER	PLBG	PLUMBING
BTU	BRITISH THERMAL UNIT	PRV	PRESSURE REDUCING
CFH	CUBIC FEET PER HOUR		VALVE
CO	CLEANOUT	PSI	POUNDS PER SQUARE INCH
CONN	CONNECTION	PVC	POLYVINYL CHLORIDE
CPVC	CHLORINATED PVC	P.C.	PLUMBING CONTRACTOR
CW	COLD WATER	RD	ROOF DRAIN
DEPT	DEPARTMENT	REQ'D	REQUIRED
DFU	DRAINAGE FIXURE UNIT	RH	RADIANT HEATER
DN	DOWN	RL	RAIN LEADER
DOM	DOMESTIC	RPZ	REDUCED PRESSURE
DWG	DRAWING		ZONE DEVICE
E.C.	ELECTRICAL CONTRACTOR	RTU	ROOF TOP UNIT
ELEC	ELECTRICAL	SAN	SANITARY
EQPM	EQUIPMENT	SCH	SCHEDULE
ETR	EXISTING TO REMAIN	SF	SQUARE FEET
EWH	ELECTRIC WATER HEATER	SOV	SHUT-OFF VALVE
FCO	FLOOR CLEANOUT	ST	STORM SEWER
FD	FLOOR DRAIN	SQ	SQUARE
FDC	FIRE DEPT. CONN.	T&P	TEMPERATURE & PRESSURE
FT	FEET	TMV	THERMOSTATIC
FP	FIRE PROTECTION		MIXING VALVE
G	NATURAL GAS	TP	TRAP PRIMER
G.C.	GENERAL CONTRACTOR	TYP	TYPICAL
GCO	GRADE CLEANOUT	UNO	UNLESS NOTED OTHERWISE
GPM	GALLONS PER MINUTE	U/G	UNDERGROUND
GPR	GAS PRESSURE	V	VENT
	REGULATOR	V.I.F	VERIFY IN FIELD
HB	HOSE BIBB	VTR	VENT THRU ROOF
HR	HOUR	W/	WITH
HW	HOT WATER	W.C.	WATER COLUMN
I.A.W.	IN ACCORDANCE WITH	WCO	WALL CLEANOUT
IE	INVERT ELEVATION	WH	WALL HYDRANT
IN	INCH	WHA	WATER HAMMER ARRESTOR
IW	INDIRECT WASTE		
KW	KILOWATT		

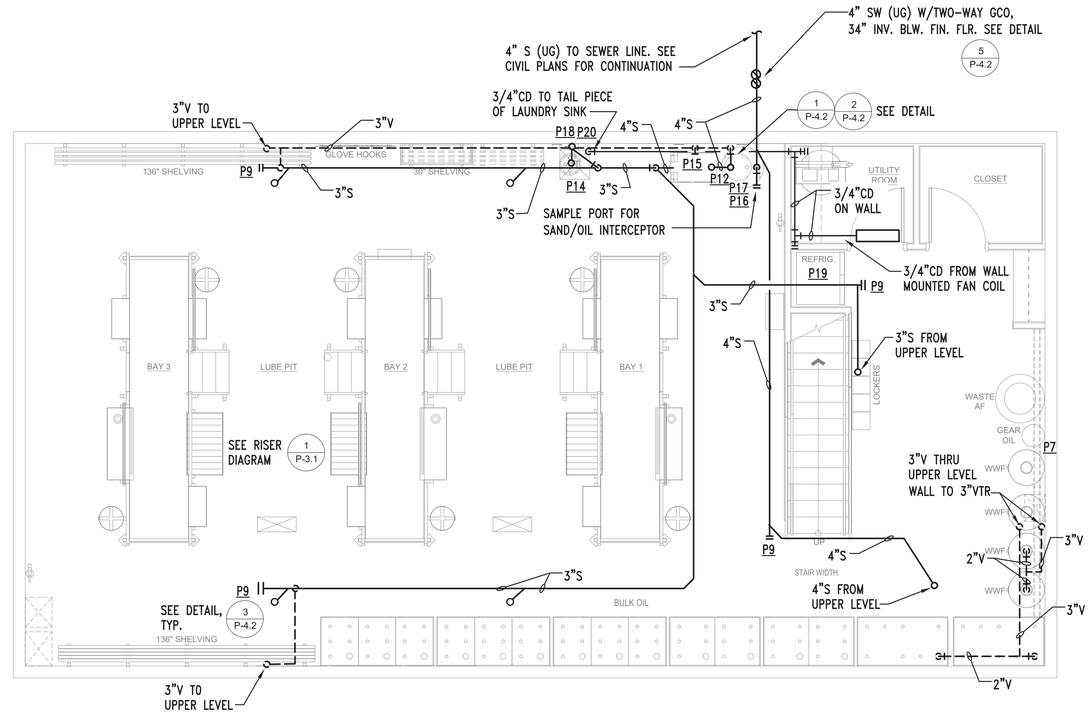

1 P-1.1 LOWER LEVEL WASTE AND VENT PLAN
Scale: 1/4" = 1'-0"

BRAMIC DESIGN GROUP PLLC
8003 S. GALILEO LN.
TUCSON, AZ 85747
PHONE: (520) 401-9183

COPYRIGHT NOTICE
This drawing is the property of the above referenced Professional and is not to be used for any purpose other than the specific project and site names herein, and cannot be reproduced in any manner without the express written permission from the Professional.

DATE	ISSUE
05.17.24	ISSUED FOR PERMIT REVIEW SET

DATE	REVISION
07/08/24	COT COMMENTS

PROFESSIONAL SEAL

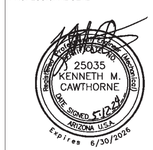

PROFESSIONAL LICENSE NO:
ARIZONA 15939
CERTIFICATE OF AUTHORIZATION NO:

PROFESSIONAL IN CHARGE
GENE GOLDSTEIN

PROJECT MANAGER
KYLE VILAUBI

QUALITY CONTROL
KYLE VILAUBI, GENE GOLDSTEIN

DRAWN BY
KYLE VILAUBI / JON WADE

PROJECT ADDRESS
2920 S. PARK AVE.
TUCSON ARIZONA 85713

VALVOLINE INSTANT OIL CHANGE

BDG PROJECT NUMBER
23-849

SHEET NAME
PLUMBING SOIL PLAN - LOWER LEVEL

SHEET #
P-1.1

KC MECHANICAL ENGINEERING, L.L.C.
5447 East Fifth Street # 112 520/327-7611
Tucson, Arizona 85711 520/327-0432
Designers Mech: LAB Plumb: ROM Project #: 23-359

STONE- HARDIE PANEL OPTION

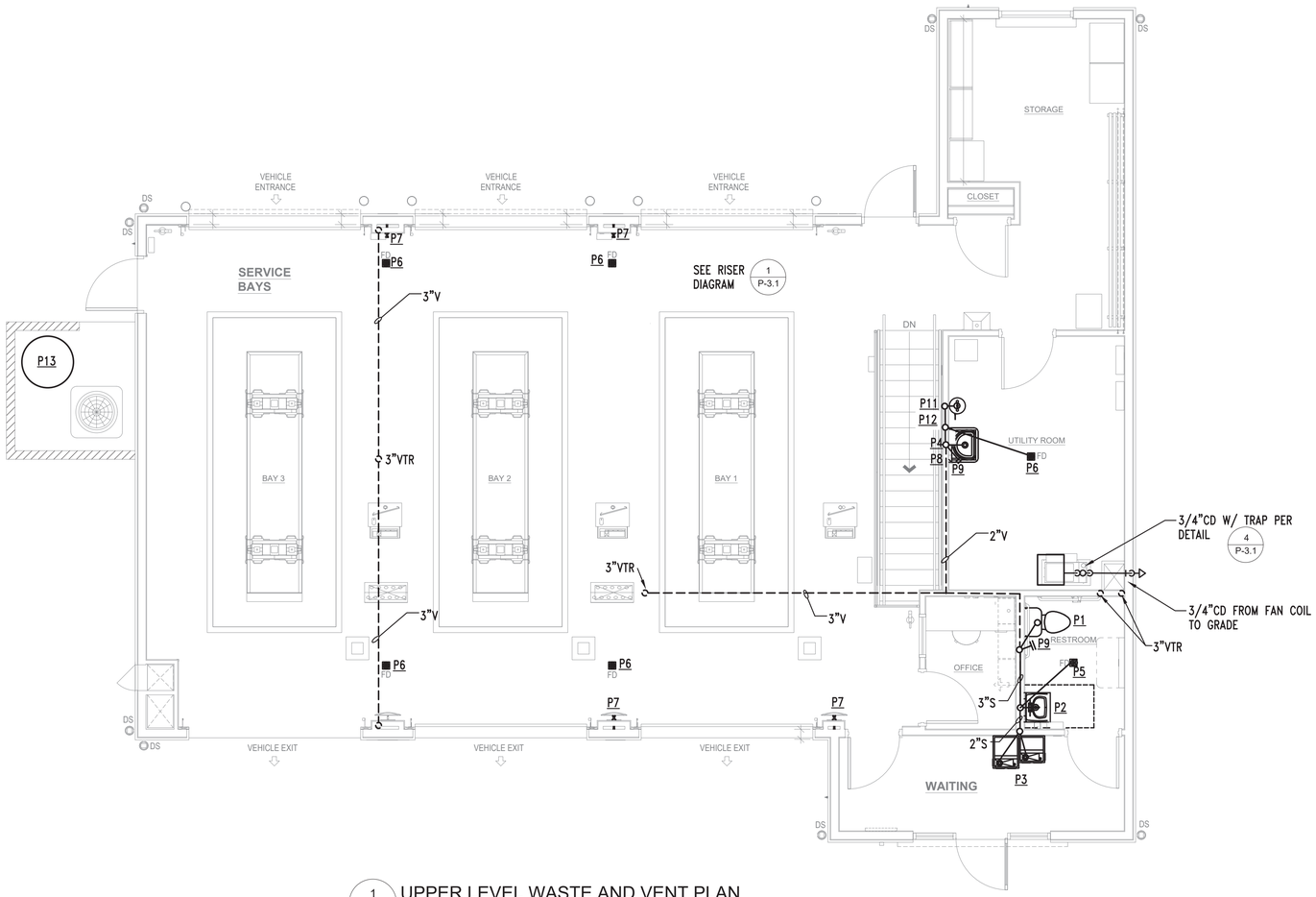

1 P-1.2 UPPER LEVEL WASTE AND VENT PLAN
Scale: 1/4" = 1'-0"

BRAMIC DESIGN GROUP PLLC
8003 S. GALILEO LN.
TUCSON, AZ 85747
PHONE: (520) 401-9183

COPYRIGHT NOTICE
This drawing is the property of the above referenced Professional and is not to be used for any purpose other than the specific project and site names herein, and cannot be reproduced in any manner without the express written permission from the Professional.

DATE	ISSUE
05.17.24	ISSUED FOR PERMIT REVIEW SET

	DATE	REVISION
	07/08/24	COT COMMENTS

PROFESSIONAL SEAL

25035 KENNETH M. CAWTHORNE DATE SIGNED 5.17.24 ARIZONA U.S.A. Expires 6/30/2026

PROFESSIONAL LICENSE NO:
ARIZONA 15939
CERTIFICATE OF AUTHORIZATION NO:

PROFESSIONAL IN CHARGE
GENE GOLDSTEIN

PROJECT MANAGER
KYLE VILAUBI

QUALITY CONTROL
KYLE VILAUBI, GENE GOLDSTEIN

DRAWN BY
KYLE VILAUBI / JON WADE

PROJECT ADDRESS
2920 S. PARK AVE
TUCSON ARIZONA 85713

Valvoline Instant Oil Change

VALVOLINE INSTANT OIL CHANGE

BDG PROJECT NUMBER
23-849

SHEET NAME
PLUMBING SOIL PLAN -UPPER LEVEL

SHEET #
P-1.2

KC MECHANICAL ENGINEERING, L.L.C.
5447 East Fifth Street # 112 520/327-7611
Tucson, Arizona 85711 520/327-0432
Designers Mech: LAB Plumb: ROM Project #: 23-359

STONE- HARDIE PANEL OPTION

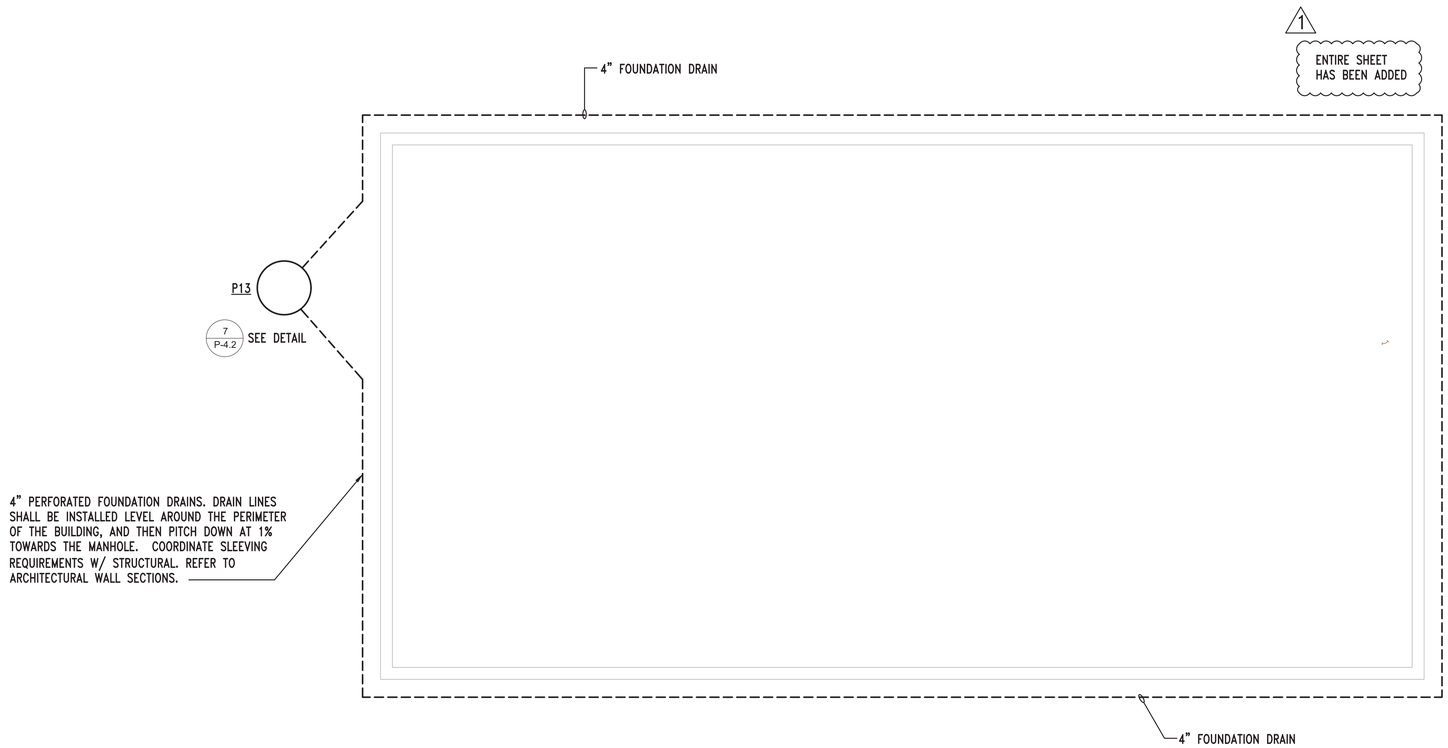

1
P-1.3
FOUNDATION DRAIN PLAN
Scale: 1/4" = 1'-0"

KC MECHANICAL ENGINEERING, L.L.C.
5447 East Fifth Street # 112 520/327-7611
Tucson, Arizona 85711 520/327-0432
Designers Mech: LAB Plumb: ROM Project #: 23-359

STONE- HARDIE PANEL OPTION

BRAMIC DESIGN GROUP PLLC
8003 S. GALILEO LN.
TUCSON, AZ 85747
PHONE: (520) 401-9183

COPYRIGHT NOTICE
This drawing is the property of the above referenced Professional and is not to be used for any purpose other than the specific project and site names herein, and cannot be reproduced in any manner without the express written permission from the Professional.

DATE	ISSUE
05.17.24	ISSUED FOR PERMIT REVIEW SET

	DATE	REVISION
1	07/08/24	COT COMMENTS

PROFESSIONAL SEAL

25035
KENNETH M. CAWTHORNE
DATE SIGNED 5/24/24
ARIZONA U.S.A.
Expires 6/30/2026

PROFESSIONAL LICENSE NO:
ARIZONA 15939
CERTIFICATE OF AUTHORIZATION NO:

PROFESSIONAL IN CHARGE
GENE GOLDSTEIN

PROJECT MANAGER
KYLE VILAUBI

QUALITY CONTROL
KYLE VILAUBI, GENE GOLDSTEIN

DRAWN BY
KYLE VILAUBI / JON WADE

PROJECT ADDRESS
1 2920 S. PARK AVE
TUCSON, ARIZONA 85713

Valvoline
Instant Oil Change

VALVOLINE INSTANT OIL CHANGE

BDG PROJECT NUMBER
23-849

SHEET NAME
PLUMBING FOUNDATION DRAIN PLAN

SHEET #
P-1.3

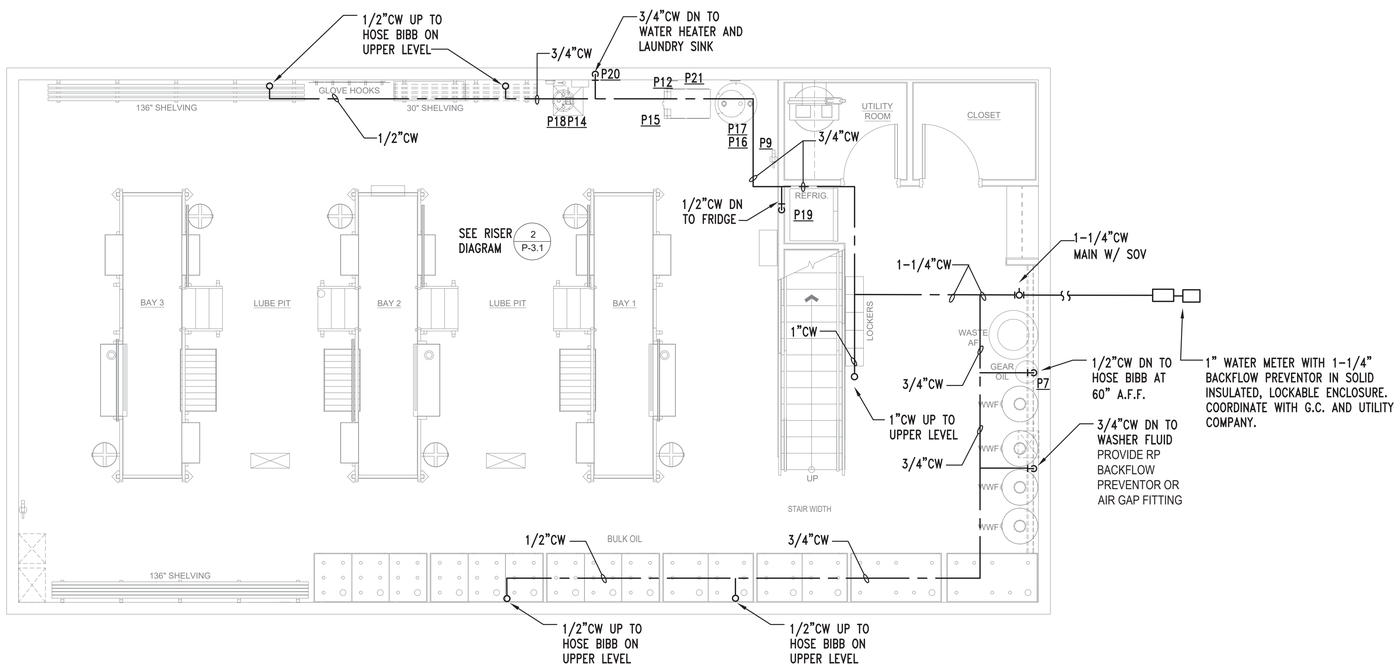

1 / P-2.1 LOWER LEVEL WATER PLAN
Scale: 1/4" = 1'-0"

BRAMIC DESIGN GROUP PLLC
8003 S. GALILEO LN.
TUCSON, AZ 85747
PHONE: (520) 401-9183

COPYRIGHT NOTICE
This drawing is the property of the above referenced Professional and is not to be used for any purpose other than the specific project and site names herein, and cannot be reproduced in any manner without the express written permission from the Professional.

DATE	ISSUE
05.17.24	ISSUED FOR PERMIT REVIEW SET

DATE	REVISION
1 07/08/24	COT COMMENTS

PROFESSIONAL SEAL

25035
KENNETH M. CAWTHORNE
DATE SIGNED 5/17/24
ARIZONA U.S.A.
Expires 6/30/2026

PROFESSIONAL LICENSE NO:
ARIZONA 15939
CERTIFICATE OF AUTHORIZATION NO:

PROFESSIONAL IN CHARGE
GENE GOLDSTEIN

PROJECT MANAGER
KYLE VILAUBI

QUALITY CONTROL
KYLE VILAUBI, GENE GOLDSTEIN

DRAWN BY
KYLE VILAUBI / JON WADE

PROJECT ADDRESS
1 2920 S. PARK AVE.
TUCSON ARIZONA 85713

Valvoline
Instant Oil Change

VALVOLINE INSTANT OIL CHANGE

BDG PROJECT NUMBER
23-849

SHEET NAME
PLUMBING WATER PLAN -UPPER LEVEL

SHEET #
P-2.1

KC MECHANICAL ENGINEERING, L.L.C.
5447 East Fifth Street # 112 520/327-7611
Tucson, Arizona 85711 520/327-0432
Designers Mech: LAB Plumb: ROM Project #: 23-359

STONE- HARDIE PANEL OPTION

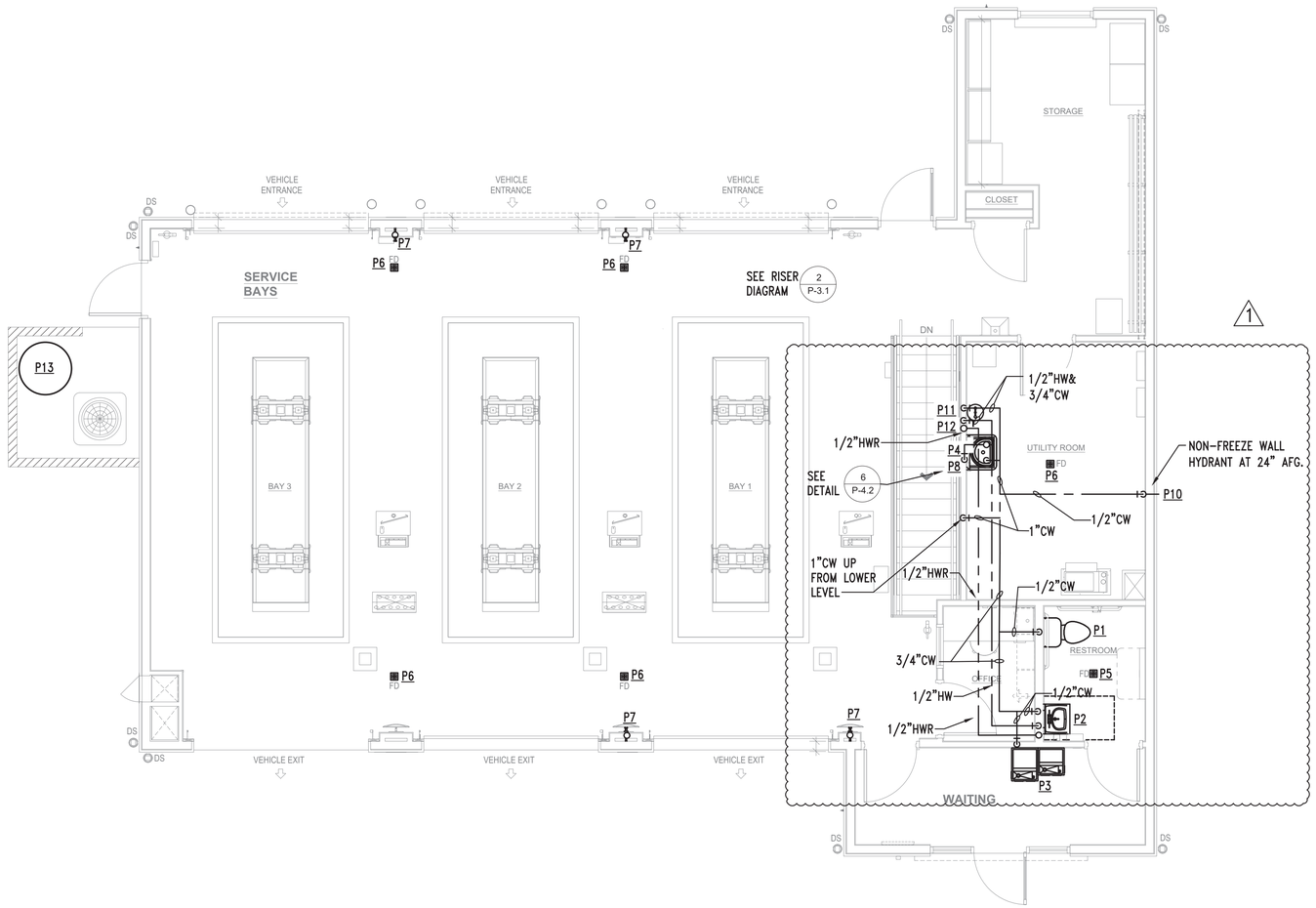

1 P-1.2 UPPER LEVEL WATER PLAN
Scale: 1/4" = 1'-0"

BRAMIC DESIGN GROUP PLLC
8003 S. GALILEO LN.
TUCSON, AZ 85747
PHONE: (520) 401-9183

COPYRIGHT NOTICE
This drawing is the property of the above referenced Professional and is not to be used for any purpose other than the specific project and site names herein, and cannot be reproduced in any manner without the express written permission from the Professional.

DATE	ISSUE
05.17.24	ISSUED FOR PERMIT REVIEW SET

DATE	REVISION
07/08/24	COT COMMENTS

PROFESSIONAL SEAL

PROFESSIONAL LICENSE NO:
ARIZONA 15939
CERTIFICATE OF AUTHORIZATION NO:

PROFESSIONAL IN CHARGE
GENE GOLDSTEIN

PROJECT MANAGER
KYLE VILAUBI

QUALITY CONTROL
KYLE VILAUBI, GENE GOLDSTEIN

DRAWN BY
KYLE VILAUBI / JON WADE

PROJECT ADDRESS
2920 S. PARK AVE
TUCSON ARIZONA 85713

VALVOLINE INSTANT OIL CHANGE

BDG PROJECT NUMBER
23-849

SHEET NAME
PLUMBING WATER PLAN -UPPER LEVEL

SHEET #
P-2.2

KC MECHANICAL ENGINEERING, L.L.C.
5447 East Fifth Street # 112 520/327-7611
Tucson, Arizona 85711 520/327-0432
Designers Mech: LAB Plumb: ROM Project #: 23-359

STONE- HARDIE PANEL OPTION

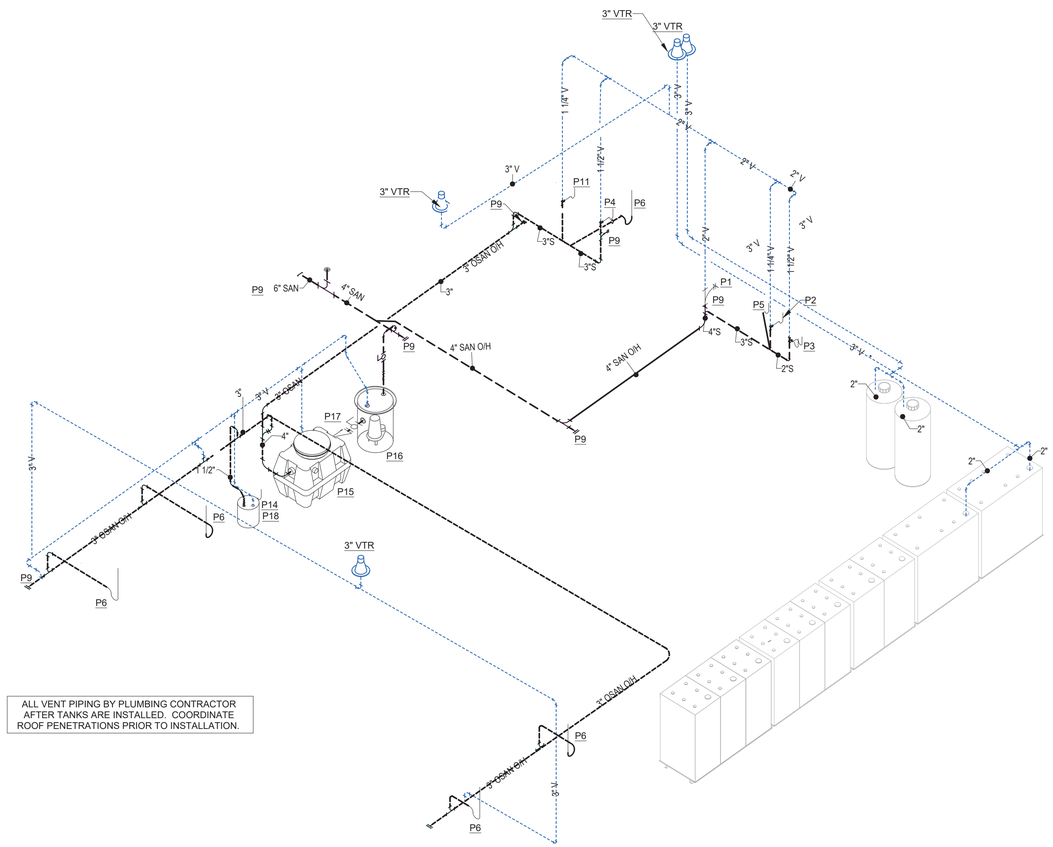

ALL VENT PIPING BY PLUMBING CONTRACTOR AFTER TANKS ARE INSTALLED. COORDINATE ROOF PENETRATIONS PRIOR TO INSTALLATION.

1 / P-3.1 WASTE AND VENT RISER
Scale:

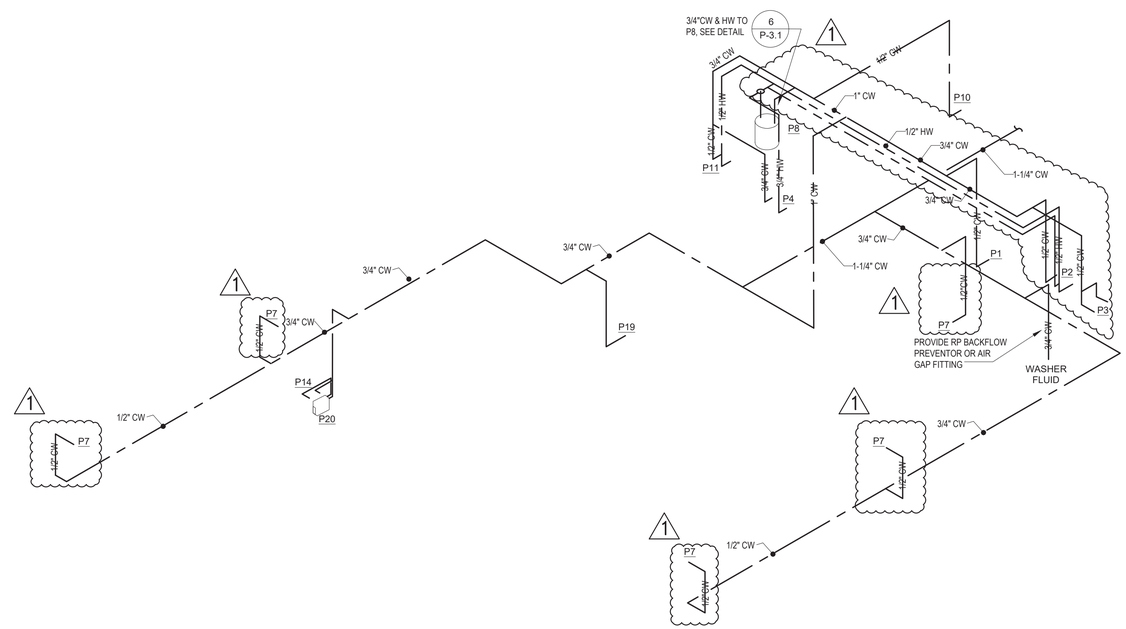

2 / P-3.1 DOMESTIC WATER RISER
Scale:

BRAMIC DESIGN GROUP PLLC
8003 S. GALILEO LN.
TUCSON, AZ 85747
PHONE: (520) 401-9183

COPYRIGHT NOTICE
This drawing is the property of the above referenced Professional and is not to be used for any purpose other than the specific project and site names herein, and cannot be reproduced in any manner without the express written permission from the Professional.

DATE	ISSUE
05.17.24	ISSUED FOR PERMIT REVIEW SET

DATE	REVISION
1 07/08/24	COT COMMENTS

PROFESSIONAL SEAL

REGISTERED PROFESSIONAL ENGINEER (CIVIL) 25035 KENNETH M. CAWTHORNE DATE SIGNED 5/17/24 ARIZONA U.S.A. Expires 6/30/2026

PROFESSIONAL LICENSE NO:
ARIZONA 15939
CERTIFICATE OF AUTHORIZATION NO:

PROFESSIONAL IN CHARGE
GENE GOLDSTEIN

PROJECT MANAGER
KYLE VILAUBI

QUALITY CONTROL
KYLE VILAUBI, GENE GOLDSTEIN

DRAWN BY
KYLE VILAUBI / JON WADE

PROJECT ADDRESS
1 2920 S. PARK AVE
TUCSON ARIZONA 85713

Valvoline Instant Oil Change

VALVOLINE INSTANT OIL CHANGE

BDG PROJECT NUMBER
23-849

SHEET NAME
PLUMBING RISER DIAGRAMS

KC MECHANICAL ENGINEERING, L.L.C.
5447 East Fifth Street # 112 520/327-7611
Tucson, Arizona 85711 520/327-0432
Designers Mech: LAB Plumb: ROM Project #: 23-359

SHEET #
P-3.1

STONE- HARDIE PANEL OPTION

PLUMBING FIXTURE SCHEDULE

TAG	TYPE	CONNECTION SIZE CW	HW	SAN	VENT	DESCRIPTION
1 P1	WATER CLOSET	1/2"	--	4"	2"	AMERICAN STANDARD, KOHLER, OR CRANE. ADA COMPLIANT, 1.1 GPF PRESSURE ASSISTED SIPHON JET FLUSH TANK WASTER CLOSET. FLOOR MOUNTED, BACK OUTLET, ELONGATED BOWL, W/ 3/8" ANGLE SUPPLY W/ STOP, CHINA BOLT CAPS AND WHITE OPEN FRONT PLASTIC SEAT. MOUNT TOP OF SEAT A MAXIMUM OF 19" ABOVE FINISHED FLOOR.
P2	LAVATORY	1/2"	1/2"	1-1/4"	1-1/4"	KOHLER "KINGSTON" #K-2005, VIT. CHINA WALL HUNG LAVATORY. PROVIDE "CHICAGO" #802-VE2805-665CP FAUCET (0.5 GPM,0.25 GALS. MAX PER CYCLE) & #327 DRAIN, CAST BRASS "P" TRAP, McGUIRE CHROME PLATED LOOSE KEY ANGLE STOPS & SUPPLIES AND FLOOR MOUNTED WALL HANGER. PROVIDE ASSE 1070 CERTIFIED THERMOSTATIC MIXING VALVE EQUAL OF WATTS MODEL#LFUSG-B W/ 3/8" FITTINGS
P3	WATER COOLER	1/2"	--	1-1/2"	1-1/2"	ELKAY #LZSTL8WSLK TWO STATION W/ BOTTLE FILLER, BARRIER FREE WATER COOLER WITH WATERSENTRY VII FILTER SYSTEM. 8.0 GPH CAPACITY OF 50 DEG. WATER AT 90 DEG. AMBIENT TEMPERATURE 6.0 FLA, 120/1/60. PROVIDE "P" TRAP AND McGUIRE CHROME PLATED LOOSE KEY ANGLE STOP & SUPPLY, & IN WALL CARRIER.
P4	SERVICE SINK	3/4"	3/4"	3"	1-1/2"	24"x20" ACID RESISTANT, ENAMELED CAST IRON SERVICE SINK WITH BLANK BACK, STAINLESS STEEL RIM GUARD, WALL HANGER SUPPORTS, FAUCET WITH VALVE UNITS, VACUUM BREAKER, WALL BRACE, THREADED SPOUT AND PAIL HOOK AND 3" ENAMELED INSIDE TRAP STANDARD WITH STRAINER, CLEANOUT AND SUPPORT.
P5	FLOOR DRAIN	--	--	3"	1-1/2"	JAY R. SMITH 2005-A-PB-U, 6"DIA. ADJUSTABLE FOR VARYING HTS, POLISHED BRONZE STRAINER, TRAP PROTECTION DEVICE.
P6	FLOOR DRAIN	--	--	3"	1-1/2"	JAY R. SMITH 2005-A-B-PB-U, 8" DIA., POLISHED BRONZE STRAINER, VANDAL PROOF SCREWS.
1 P7	HOSE BIBB	1/2"	--	--	--	WOODFORD MODEL 24C ANTI-SIPHON PROTECTED WALL FAUCET.
P8	WATER HEATER	3/4"	3/4"	--	--	LOCHINVAR ELECTRIC WATER HEATER JUNIOR MODEL JRC010DS 1.65 KW, 10 GALLON STORAGE, 13.75 AMP, 120 VOLT, SINGLE PHASE, SET TEMP. AT 110°F. PROVIDE WITH DRAIN PAN MINIMUM 4" LARGER THAN OVERALL DIAMETER OF WATER HEATER. RUN PAN OVERFLOW LINE TO SINK BELOW. PROVIDE RECIRC PUMP.
P9	CLEANOUT	--	--	LINE SIZE	--	PVC END CAP
P10	HYDRANT	1/2"	--	--	--	PRIER MODEL C-534D10, DOUBLE CHECK VALVE AND ANTI-SIPHON VACUUM BREAKER.
P11	EMERGENCY EYEWASH	1/2" TW	--	1-1/4"	1-1/4"	GUARDIAN G1814 - HS - TMV WALL-MOUNTED EYEWASH WITH DUST COVER, INTERNAL FLOW CONTROL AND FILTER, 1/2" IPS FEMALE INLET, 1-1/4" WASTE; ANSI COMPLIANT IDENTIFICATION SIGN AND AUXILIARY HAND-HELD DRENCH HOSE FOR RINSING EYES, FACE OR BODY. INCLUDES G3600 THERMOSTATIC MIXING VALVE TO DELIVER WARM (TEPID) WATER AS REQUIRED BY ANSI Z358.1-2009.
1 P12	BACKWATER VALVE	--	--	4"	--	SPEARS SML-4XP-A 4" PVC UTILITY BACKWATER VALVE SOC EPDM.
P13	SUMP PUMP (FOUNDATION DRAINS)	--	--	2"	--	ONE (1) ZOELLER M267, PACO, OR PEERLESS: 115 VOLT, SINGLE PHASE, SUBMERSIBLE SUMP PUMP, AUTOMATIC, W/ 2" VERTICAL DISCHARGE, 1/2 HP, VORTEX IMPELLER, CAPABLE OF DISCHARGING 2" SOLIDS, CAST IRON CHECK VALVE, 3" VENT OPENING IN LID, W/ VENT FLANGE, PROVIDE AUDIBLE/VISUAL ALARM LOCATED IN OFFICE TO NOTIFY OWNER IN THE EVENT OF PUMP FAILURE.
P14	LAUNDRY SINK	1/2"	1/2"	1-1/2"	--	FIAT SF-1-F SINGLE COMPARTMENT FIBERGLASS FLOOR MOUNTED LAUNDRY TUB WITH WHITE BAKED ENAMEL LEGS WITH LEVELING FEET. PROVIDE DECK TYPE FAUCET, 4" CENTERS WITH 6" THREADED SPOUT. CAPACITY OF 20 GALLONS, SIZE 23"X22". PROVIDE WITH CHROME SUPPLIES, STOPS, TAILPIECE, P-TRAP, DRAIN AND ESCUTCHEONS. PROVIDE COMPLETE WITH GUARDIAN MODEL G1100 'EYESAFE' FAUCET MOUNTED EYEWASH WITH ADJUSTABLE AERATED OUTLET HEADS.
P15	OIL-WATER SEPARATOR	--	--	4"	3"	STRIEM OS-75 OIL WATER SEPARATOR. 110 GALLON CAPACITY, 75GPM FLOW RATE, FLOOR MOUNTED.
P16	SUMP PUMP (LUBE PIT)	--	--	--	--	WEIL PUMP 1408 SUBMERSIBLE SUMP PUMP, 1-1/4" DISCHARGE, 1/3 HP, 120V, 1Ø, 10 GPM AT 25 FT TOTAL HEAD. WEIL TETHERED FLOAT MODEL 8245.
P17	LUBE PIT SUMP / CROCK BASIN	--	--	--	--	AK INDUSTRIES INC. - FIBERGLASS BASIN, BASIN PART GB-24-100, AND 1/4" STEEL COVER #LB-2401. PROVIDE GEL-COAT EXTERIOR FINISH FOR ABOVE GRADE INSTALLATION. FURNISH WITH AKP10185 4" PVC HUB TO ALLOW FOR 1/8" / 12" SLOPING FROM STRIEM OS-75 OUTPUT.
P18	SUMP PUMP (UNDER LAUNDRY SINK)	--	--	1-1/2"	2"	LITTLE GIANT MODEL WRSC-6, CAST IRON HOUSING WITH PROTECTIVE EPOXY COATING, 1/3 HP, 115V, 12 GPM AT 15 FT HEAD, AUTOMATIC DIAPHRAGM PRESSURE SWITCH, 3.5 GALLON POLYPROPYLENE BASIN, DISCHARGE SIZE 1-1/2", INTAKE SIZE 1-1/2" , VENT SIZE 2".
P19	ICE MAKER BOX	1/2"	--	--	--	OATEY 38823 OR EQUAL.
P20	WATER HEATER - INSTANTANEOUS	3/4"	3/4"	--	--	CHRONOMITE R-68L / 208, 14KW, 208V/1-PHASE, 68 A, 64ºF RISER AT 1.5GPM. INSTALL WATER HEATER ON WALL BENEATH LAUNDRY SINK.

PLUMBING FIXTURE UNITS

FIXTURE	QTY	WASTE DFU		WATER WSFU	
ELECTRIC WATER COOLER	1	0.5	0.5	0.5	0.5
EYE WASH STATION	1	2	2	2	2
FLOOR DRAIN	6	6	35	0	0
HOSE BIBB / HYDRANT	6	0	0	2.5/1	7.5
LAUNDRY SINK	1	2	2	2	2
LAVATORY	1	1	1	1	1
SERVICE SINK	1	3	3	3	3
WATER CLOSET (TANK)	1	4	4	2.5	2.5
TOTAL			47.5		18.5

TOTAL WATER SUPPLY: 18.5 WSFU = 13 GPM.

BRAMIC DESIGN GROUP PLLC
8003 S. GALILEO LN.
TUCSON, AZ 85747
PHONE: (520) 401-9183

COPYRIGHT NOTICE
This drawing is the property of the above referenced Professional and is not to be used for any purpose other than the specific project and site names herein, and cannot be reproduced in any manner without the express written permission from the Professional.

DATE	ISSUE
05.17.24	ISSUED FOR PERMIT REVIEW SET

DATE	REVISION
1 07/08/24	COT COMMENTS

PROFESSIONAL SEAL

REGISTERED PROFESSIONAL ENGINEER (MECHANICAL) 25035 KENNETH M. CAWTHORNE DATE SIGNED 5/17/24 ARIZONA U.S.A. Expires 6/30/2026

PROFESSIONAL LICENSE NO:
ARIZONA 15939
CERTIFICATE OF AUTHORIZATION NO:

PROFESSIONAL IN CHARGE
GENE GOLDSTEIN

PROJECT MANAGER
KYLE VILAUBI

QUALITY CONTROL
KYLE VILAUBI, GENE GOLDSTEIN

DRAWN BY
KYLE VILAUBI / JON WADE

1 PROJECT ADDRESS
2920 S. PARK AVE
TUCSON ARIZONA 85713

Valvoline Instant Oil Change

VALVOLINE INSTANT OIL CHANGE

BDG PROJECT NUMBER
23-849

SHEET NAME
PLUMBING SOIL PLAN -UPPER LEVEL

SHEET #
P-4.1

KC MECHANICAL ENGINEERING, L.L.C.
5447 East Fifth Street # 112 520/327-7611
Tucson, Arizona 85711 520/327-0432
Designers Mech: LAB Plumb: ROM Project #: 23-359

STONE- HARDIE PANEL OPTION

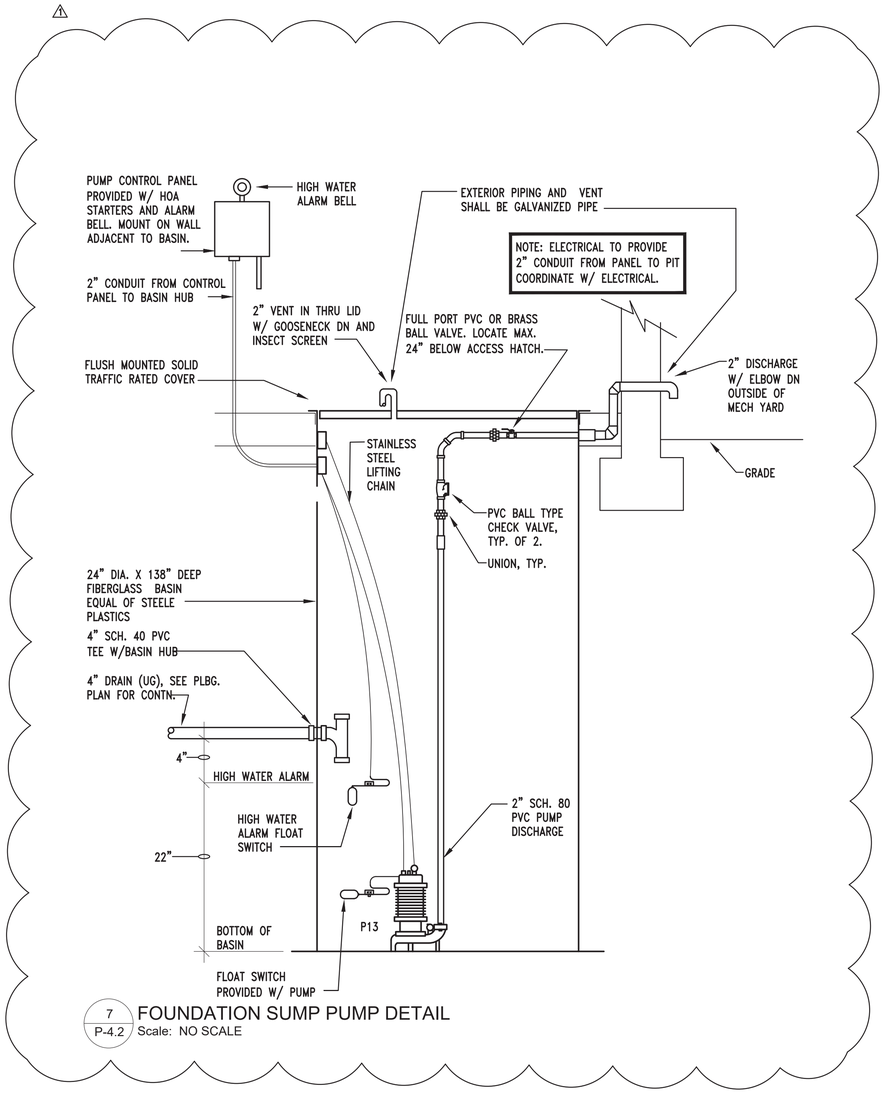

7 / P-4.2 FOUNDATION SUMP PUMP DETAIL
Scale: NO SCALE

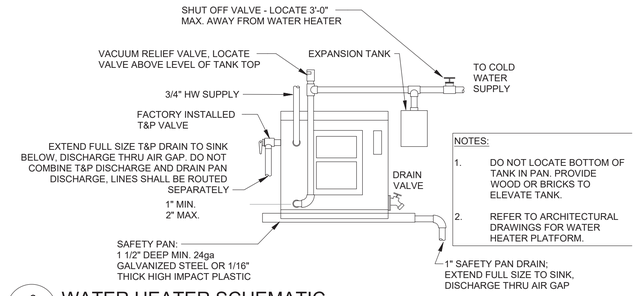

NOTES:
1. DO NOT LOCATE BOTTOM OF TANK IN PAN. PROVIDE WOOD OR BRICKS TO ELEVATE TANK.
2. REFER TO ARCHITECTURAL DRAWINGS FOR WATER HEATER PLATFORM.

6 / P-4.2 WATER HEATER SCHEMATIC
Scale: NO SCALE

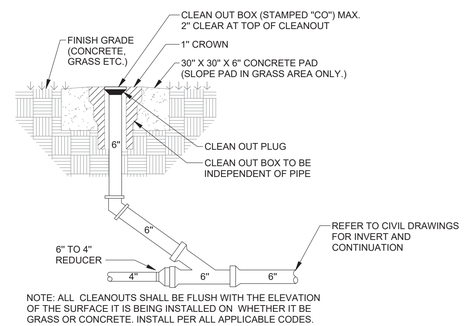

NOTE: ALL CLEANOUTS SHALL BE FLUSH WITH THE ELEVATION OF THE SURFACE IT IS BEING INSTALLED ON. WHETHER IT BE GRASS OR CONCRETE. INSTALL PER ALL APPLICABLE CODES.

5 / P-4.2 EXTERIOR CLEANOUT DETAIL
Scale: NO SCALE

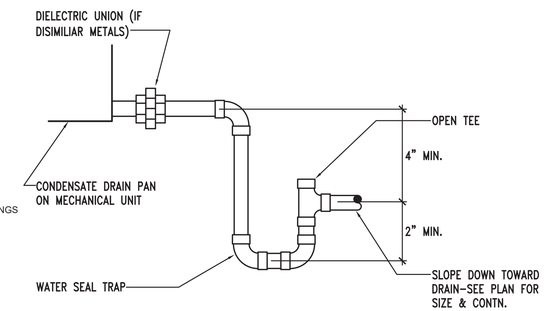

4 / P-4.2 CONDENSATE TRAP DETAIL
Scale: NO SCALE

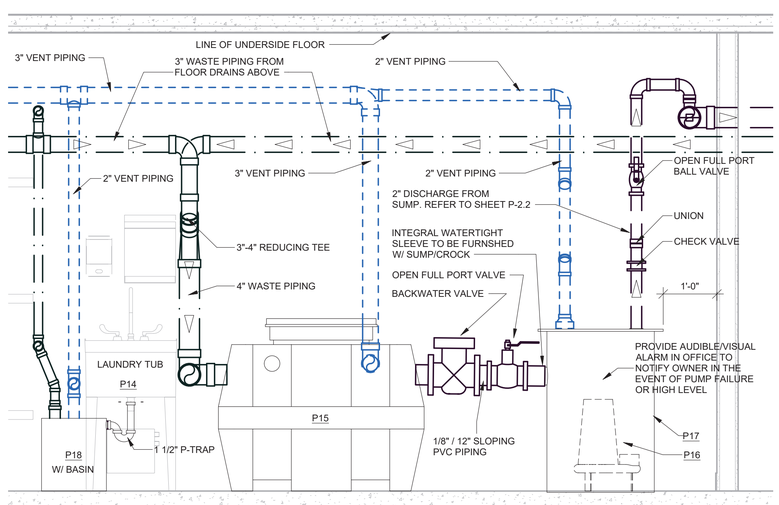

1 / P-4.2 SUMP PUMP OIL SEPARATOR SCHEMATIC
Scale: NO SCALE

7 / P-4.2 FOUNDATION SUMP PUMP DETAIL
Scale: NO SCALE

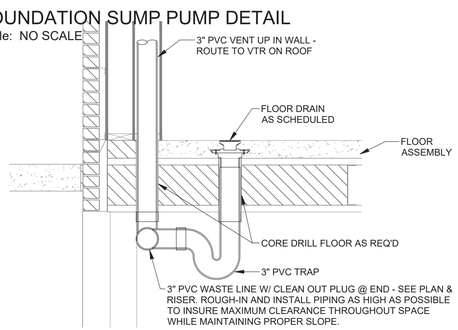

3 / P-4.2 FLOOR DRAIN WASTE VENT DETAIL
Scale: NO SCALE

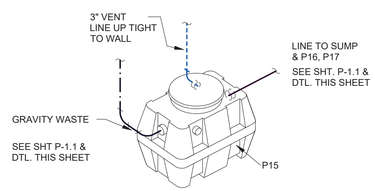

NOTE: OIL WATER SEPARATOR IS DESIGNED IN ACCORDANCE WITH MANUFACTURER'S INSTRUCTIONS AND REQUIREMENTS BASED ON ANTICIPATED CONDITIONS OF USE PER IPC SECTION 1003.2.

OIL WATER SEPARATOR SIZING			
QTY.	DESCRIPTION	GPM	TOTAL GPM
1	SERVICE SINK	5	5
1	LAUNDRY SINK	3	3
5	FLOOR DRAIN/ FLOOR SINK	1	5
		TOTAL:	13

TOTAL GPM REQUIRED = 13 GPM
CAPACITY OF OIL SEPARATOR = 75 GPM (110 GAL)

2 / P-4.2 OIL SEPARATOR DETAIL
Scale: NO SCALE

BRAMIC DESIGN GROUP PLLC
8003 S. GALILEO LN.
TUCSON, AZ 85747
PHONE: (520) 401-9183

COPYRIGHT NOTICE
This drawing is the property of the above referenced Professional and is not to be used for any purpose other than the specific project and site names herein, and cannot be reproduced in any manner without the express written permission from the Professional.

DATE	ISSUE
05.17.24	ISSUED FOR PERMIT REVIEW SET

DATE	REVISION
1 07/08/24	COT COMMENTS

PROFESSIONAL SEAL
REGISTERED PROFESSIONAL ENGINEER (CIVIL) 25035 KENNETH M. CAWTHORNE DATE SIGNED 5/17/24 ARIZONA, U.S.A. Expires 6/30/2024

PROFESSIONAL LICENSE NO:
ARIZONA 15939
CERTIFICATE OF AUTHORIZATION NO:

PROFESSIONAL IN CHARGE
GENE GOLDSTEIN

PROJECT MANAGER
KYLE VILAUBI

QUALITY CONTROL
KYLE VILAUBI, GENE GOLDSTEIN

DRAWN BY
KYLE VILAUBI / JON WADE

1 PROJECT ADDRESS
2920 S. PARK AVE
TUCSON ARIZONA 85713

Valvoline Instant Oil Change

VALVOLINE INSTANT OIL CHANGE

BDG PROJECT NUMBER
23-849

SHEET NAME
PLUMBING SOIL PLAN -UPPER LEVEL

SHEET #
P-4.2

KC MECHANICAL ENGINEERING, L.L.C.
5447 East Fifth Street # 112 520/327-7611
Tucson, Arizona 85711 520/327-0432
Designers Mech: LAB Plumb: ROM Project #: 23-359

STONE- HARDIE PANEL OPTION

MECHANICAL GENERAL REQUIREMENTS

CODES: CONTRACTOR SHALL COMPLY WITH ALL REQUIREMENTS OF THE FOLLOWING CODES: INTERNATIONAL BUILDING CODE (2018 EDITION), INTERNATIONAL MECHANICAL CODE (2018 EDITION), INTERNATIONAL PLUMBING CODE (2018 EDITION), INTERNATIONAL ENERGY CONSERVATION CODE (2018 EDITION) AND THE INTERNATIONAL FIRE CODE (2018 EDITION) AS AMENDED BY THE LOCAL GOVERNING AGENCY.

GENERAL: THE WORK COVERED BY THIS SPECIFICATION SHALL INCLUDE THE FURNISHING OF ALL MATERIALS, LABOR, TRANSPORTATION, TOOLS, PERMITS, FEES, INSPECTIONS, UTILITIES AND INCIDENTALS NECESSARY FOR THE COMPLETE INSTALLATION OF ALL WORK REQUIRED BY THE CONTRACT DRAWINGS.

DRAWINGS: THE DRAWINGS ARE DIAGRAMMATIC IN CHARACTER AND CANNOT SHOW EVERY CONNECTION IN DETAIL OR EVERY PIPE OR DUCT IN ITS EXACT LOCATION. THESE DETAILS ARE SUBJECT TO THE REQUIREMENTS OF ORDINANCES AND ALSO STRUCTURAL AND ARCHITECTURAL CONDITIONS. THE CONTRACTOR SHALL CAREFULLY INVESTIGATE STRUCTURAL AND FINISH CONDITIONS AND SHALL COORDINATE WITH THE SEPARATE TRADES IN ORDER TO AVOID INTERFERENCE BETWEEN THE VARIOUS PHASES OF WORK. WORK SHALL BE LAID OUT SO THAT IT WILL BE CONCEALED IN FURRED CHASES OR ABOVE CEILINGS, ETC., IN FINISHED PORTIONS OF THE BUILDING, UNLESS SPECIFICALLY NOTED OR INDICATED TO BE EXPOSED. WORK SHALL BE INSTALLED TO AVOID CRIPPLING OF STRUCTURAL MEMBERS. ALL WORK SHALL BE RUN PARALLEL OR PERPENDICULAR TO THE LINES OF THE BUILDING UNLESS OTHERWISE NOTED. THE APPROXIMATE LOCATION OF EACH ITEM IS INDICATED ON THE DRAWINGS. THESE DRAWINGS ARE NOT INTENDED TO GIVE COMPLETE AND EXACT DETAILS IN REGARD TO LOCATION. EXACT LOCATIONS ARE TO BE DETERMINED BY ACTUAL MEASUREMENTS OF THE BUILDING.

EQUIPMENT INSTALLATION: PROVIDE AND INSTALL UNIONS AT PROPER POINTS TO PERMIT REMOVAL OF PIPE AND EQUIPMENT WITHOUT DAMAGE TO OTHER PARTS OF THE SYSTEM. ALL EQUIPMENT SHALL BE INSTALLED IN A MANNER TO PERMIT ACCESS TO PARTS REQUIRING SERVICE WITHOUT DISASSEMBLY OF OTHER EQUIPMENT.

EXCAVATION AND BACKFILL: THE CONTRACTOR SHALL PROVIDE ALL EXCAVATION REQUIRED FOR THE INSTALLATION OF THE WORK. CONTRACTOR SHALL BACKFILL, COMPACT AND REPAIR CONCRETE OR PAVING TO MATCH EXISTING FINISH AS CLOSELY AS POSSIBLE.

EXISTING FACILITIES: LOSS OR DAMAGE TO EXISTING FACILITY CAUSED BY THE CONTRACTOR SHALL BE REPAIRED OR REPLACED BY THE CONTRACTOR TO THE OWNER'S SATISFACTION AT NO COST TO THE OWNER. THE CONTRACTOR SHALL COORDINATE ALL WORK REQUIRED IN EXISTING AREAS WITH THE OWNER AND SHALL ARRANGE FOR ALL TEMPORARY UTILITY SERVICES, PROTECTION OF THE FACILITY AND ITS CONTENTS, BARRICADES, SAFETY DEVICES, ETC., REQUIRED TO ACCOMPLISH THE WORK. THE CONTRACTOR SHALL REMOVE AND REINSTALL EXISTING CONSTRUCTION IF REQUIRED TO ACCOMPLISH THE WORK. NOTIFY THE OWNER AT LEAST TWO DAYS IN ADVANCE OF ALL REQUIRED SERVICE OUTAGES.

SUBSTITUTIONS: EQUIPMENT OF EQUAL QUALITY TO THAT SPECIFIED MAY BE SUBSTITUTED PROVIDED IT MEETS OR EXCEEDS THE CAPACITY SCHEDULED, IS OF SIMILAR CONSTRUCTION, AND WILL FIT IN THE SPACE ALLOTTED WITH AMPLE SERVICE CLEARANCE. THE CONTRACTOR SHALL BE RESPONSIBLE FOR THE COORDINATION WITH ALL OTHER TRADES (SUCH AS ELECTRICAL AND STRUCTURAL) OF ANY PRODUCT REQUIRING A CHANGE IN THE WORK OF THAT TRADE. THE CONTRACTOR SHALL ALSO BE RESPONSIBLE FOR ANY ADDITIONAL COSTS ASSOCIATED WITH SUCH A CHANGE. MATERIALS OF CONSTRUCTION SHALL BE AS SPECIFIED.

SUPPORTS, ANCHORS AND SLEEVES: SUPPORT HORIZONTAL PIPING WITH STEEL CLEVIS HANGERS AND VERTICAL PIPING WITH RISER CLAMPS. PROVIDE COPPER PLATED HANGERS AND CLAMPS FOR COPPER PIPING OR WRAP THE COPPER PIPE AT HANGERS WITH TWO LAYERS OF PVC TAPE OR EQUIVALENT. HANGER SPACING AND ROD SIZE SHALL BE IN ACCORDANCE WITH THE LOCAL CODE AND/OR ASHRAE STANDARDS. SUPPORT DUCTWORK IN ACCORDANCE WITH SMACNA STANDARDS. DUCTWORK SHALL BE SUPPORTED INDEPENDENT FROM OTHER DUCTWORK AND EQUIPMENT. PROVIDE MINIMUM 18 GAUGE GALVANIZED STEEL SLEEVES FOR DUCTWORK, FLASHINGS, AND ESCUTCHEONS. SEAL ALL WALL, ROOF, AND FLOOR PENETRATIONS. THROUGH PENETRATIONS OF FIRE RATED ASSEMBLIES SHALL BE PER MANUFACTURER'S UL LISTED DETAILS AND INSTRUCTIONS, EQUAL OF HILTI. PIPING SHALL BE PROVIDED WITH STANDARD WEIGHT STEEL PIPE OF SIZE TO PASS PIPE AND INSULATION. PIPE SLEEVES ARE NOT REQUIRED IF PENETRATIONS ARE CORE DRILLED. PIPING SHALL NOT BE SUPPORTED FROM PENETRATION.

SHOP DRAWINGS: PROVIDE SHOP DRAWINGS AND MANUFACTURER'S DATA ON ALL PLUMBING FIXTURES AND TRIM, EQUIPMENT, MECHANICAL DEVICES AND FIRE PROTECTION SYSTEM FOR APPROVAL.

WARRANTY: PROVIDE TWO YEAR WARRANTY FROM DATE OF FINAL ACCEPTANCE ON ALL LABOR AND MATERIALS PROVIDED UNDER THIS CONTRACT. PROVIDE AN ADDITIONAL FIVE YEAR WARRANTY ON THE MOTOR-COMPRESSOR UNITS FOR ALL AIR CONDITIONING OR HEAT PUMP EQUIPMENT AND WATER HEATERS.

OPERATION AND MAINTENANCE MANUAL: PROVIDE A COMPLETE INDEXED, BOUND MANUAL OF ALL EQUIPMENT REQUIRING MAINTENANCE.

TRAINING: CONTRACTOR SHALL PROVIDE A MINIMUM OF TWO HOURS TRAINING TO THE OWNER ON THE OPERATION OF ALL EQUIPMENT.

CLEAN-UP: CONTRACTOR SHALL MAINTAIN PREMISES IN CLEAN CONDITION AT END OF EACH DAY AND THOROUGHLY CLEAN-UP AT END OF CONSTRUCTION.

PLUMBING:

PIPING: SANITARY SOIL AND VENT PIPING SHALL SCHEDULE 40 SOLID CORE PVC PIPING WITH DWV FITTINGS (ASTM D1784, D1785 OR D2665) AND LOW VOC SOLVENT JOINTS WHERE APPROVED BY CODE AGENCIES AND NOT EXPOSED TO PHYSICAL DAMAGE. CELLULAR OR FOAM CORE PVC PIPING WILL NOT BE ACCEPTED. WHERE INSTALLED IN A RETURN AIR PLENUM, CAST IRON PIPING SHALL BE USED.

RAINWATER PIPING SHALL BE SERVICE WEIGHT HUBLESS CAST IRON PIPE (ASTM A74/CISPI RATED) AND FITTINGS (ASTM A888/CISPI RATED) WITH STAINLESS STEEL COUPLINGS EQUAL TO HUSKY 2000 (ASTM C1277/ CISPI 310 RATED) ABOVE GRADE AND HUSKY 4000 (ASTM C 564 OR C1540/CISPI RATED) BELOW GRADE OR SCHEDULE 40 SOLID CORE PVC PIPING WITH DWV FITTINGS (ASTM D1784, D1785 OR D2665) AND LOW VOC SOLVENT JOINTS WHERE APPROVED BY CODE AGENCIES AND NOT EXPOSED TO PHYSICAL DAMAGE. CELLULAR OR FOAM CORE PVC PIPING WILL NOT BE ACCEPTED. WHERE INSTALLED IN A RETURN AIR PLENUM, CAST IRON PIPING SHALL BE USED.

DOMESTIC WATER PIPING ABOVE GRADE SHALL BE TYPE "L" HARD TEMPER COPPER PIPE WITH WROUGHT FITTINGS AND 95_5 LEAD FREE SOLDER JOINTS.

DOMESTIC WATER PIPING BELOW GRADE FROM WATER METER TO 5'-0" FROM BUILDING SHALL BE TYPE "L" HARD TEMPER COPPER WITH WROUGHT COPPER FITTINGS AND SILVER SOLDERED JOINTS, OR SCHEDULE 40 PVC PIPING AND FITTINGS WITH SOLVENT JOINTS.

DOMESTIC WATER PIPING BELOW SLAB SHALL BE TYPE "K" SOFT TEMPER COPPER PIPE WITH NO JOINTS WHERE POSSIBLE OR WROUGHT COPPER FITTINGS AND SILVER BRAZED JOINTS.

CROSS-LINKED POLYETHYLENE (PEX) TUBING: ASTM F876 & ASTM F877, STANDARD GRADE HYDROSTATIC DESIGN AND PRESSURE RATINGS FROM PLASTIC PIPE INSTITUTE (PPI). JOINTS / FITTINGS: ASTM F1960, COLD EXPANSION FITTINGS. MANIFOLDS: TYPE L COPPER WITH UNS 3600 SERIES BRASS OR ENGINEERED PLASTIC BODY WITH PEX OUTLET CONNECTION. ACCESSORIES: ANGLE & STRAIGHT STOPS COMPATIBLE WITH PEX TUBING, BEND SUPPORTS DESIGNED FOR MAINTAINING TIGHT RADIUS BENDS SUPPLIED BY PEX TUBING MANUFACTURER.

CONDENSATE DRAIN PIPING SHALL BE TYPE M, HARD DRAWN COPPER WITH WROUGHT COPPER FITTINGS. AT CONNECTION TO EACH UNIT PROVIDE DIELECTRIC UNION, TRAP AND OPEN BREATHER TEE ON DISCHARGE SIDE OF TRAP. INSULATE ALL CONDENSATE DRAIN LINES ABOVE CEILINGS AND IN STUD SPACES WITH 1/2" THICK ARMSTRONG "ARMAFLEX" INSULATION OR EQUAL.

MEDICAL GAS EQUIPMENT: ALL MEDICAL GAS EQUIPMENT AND OUTLETS TO BE MANUFACTURED BY CHEMETRON, HILL-ROM, OR PURITAN BENNETT.

FLASHING: FLASH ALL VENTS THROUGH ROOF WITH 4 LB. LEAD SHEET EXTENDING NOT LESS THAN 8" AWAY AND TURNED DOWN INTO THE VENT, 1" MINIMUM.

INSULATION: INSULATE ALL DOMESTIC HOT WATER SUPPLY AND HOT WATER RETURN PIPING UP TO 140F OPERATING TEMPERATURE, 1-1/4' DIAMETER & SMALLER, WITH 1" THICK GLASS FIBER SECTIONAL PIPE INSULATION WITH ALL SERVICE JACKET OR EQUIVALENT ARMAFLEX FOAM. PIPING 1-1/2' DIAMETER AND LARGER SHALL BE PROVIDED WITH 1-1/2' INSULATION. NON-RECIRCULATED HOT WATER SUPPLY BRANCHES MAY BE INSULATED WITH 1/2" THICK INSULATION. INSTALL INSULATION IN ACCORDANCE WITH MANUFACTURER'S PRINTED INSTRUCTIONS. PROVIDE SHEET METAL SADDLES AT HANGER LOCATIONS. INSULATION SHALL BE INSTALLED CONTINUOUS THROUGH ALL HANGERS. ALL VALVES, PUMPS, STRAINERS, UNIONS, ETC., ON 1' AND LARGER PIPING SHALL BE FULLY INSULATED. ALL PIPING SYSTEMS SHALL BE TESTED PRIOR TO THE APPLICATION OF INSULATION. PIPES EXPOSED TO WEATHER SHALL BE PROVIDED WITH A 0.16' THICK CORRUGATED ALUMINUM JACKET. ALL JOINTS AND SEAMS IN ALUMINUM JACKETING SHALL BE SEALED.

FOR DOMESTIC HOT WATER PIPING 2' AND LARGER, PROVIDE A MINIMUM 12' LONG, HIGH DENSITY CONTINUOUS PIPE INSULATION INSERT SUCH AS CALCIUM SILICATE OR ITS EQUIVALENT AT EACH SUPPORT. INSERT SHALL BE THE SAME THICKNESS AS ADJACENT PIPING.

PIPING SPECIALTIES: CONTRACTOR SHALL INSTALL DIELECTRIC UNIONS OR FLANGES AT ALL LOCATIONS WHERE COPPER OR BRASS PIPING CONNECTS TO FERROUS PIPING OR EQUIPMENT. INSTALL WATER HAMMER ARRESTORS (EQUAL TO J.R. SMITH SERIES #5000) WITH ACCESS DOORS (EQUAL TO J.R. SMITH SERIES #4760) WHERE SHOWN ON PLAN.

PLUMBING CONTRACTOR SHALL PROVIDE A BACKWATER VALVE ON THE SEWER LINE LEAVING THE BUILDING IF THE FINISH FLOOR ELEVATION IS LESS THAN 1'-0" ABOVE THE NEAREST UPSTREAM MANHOLE OR CLEANOUT RIM ELEVATION.

VALVES: VALVES FOR DOMESTIC HOT AND COLD WATER SHALL BE LEAD-FREE AND AS MANUFACTURED BY KITZ, STOCKHAM, NIBCO, APOLLO, MILWAUKEE OR JENKINS.

BALL VALVES SHALL BE BRONZE, TWO PIECE BODY, FULL PORT FORGED BRASS BALL, SILICON BRONZE STEM, PTFE OR HDPE SEAT, PACKING AND GASKET; THREADED OR SOLDERED ENDS. VALVES SHALL CONFORM TO MSS SP-110

CHECK VALVES SHALL BE CLASS 125, BRONZE BODY, BRONZE DISC, Y-PATTERN, SWING CHECK DESIGN, THREADED OR SOLDERED ENDS. VALVES SHALL CONFORM TO MSS SP-80.

WHERE VALVE INSTALLATION IS CONCEALED; PROVIDE J.R. SMITH SERIES 4760 OR APPROVED EQUAL ACCESS DOORS WITH CONCEALED HINGE AND KEY OPERATED LOCKS. DOORS SHALL BE LARGE ENOUGH TO SERVICE VALVES AND SHALL BE INSTALLED FLUSH WITH FINISHED WALLS OR CEILINGS.

PLUMBING FIXTURES: FURNISH ALL STANDARD PRODUCTS OF AMERICAN STANDARD, KOHLER, CRANE, TOTO, DELTA, MOEN, CHICAGO, T&S BRASS, MIFAB, SLOAN, DELANY, ELKAY, HAWS OR APPROVED EQUAL. ALL FIXTURES SHALL BE WHITE UNLESS OTHERWISE NOTED. REFER TO SCHEDULE FOR SPECIFIC REQUIREMENTS. PROVIDE STOPS AT HOT AND COLD WATER CONNECTIONS TO EACH FIXTURE.

WATER HEATERS: CAPACITIES AND ACCESSORIES TO BE AS SCHEDULED ON THE DRAWINGS AND BE MANUFACTURED BY STATE, A.O. SMITH, RHEEM, BRADFORD WHITE, CHRONOMITE, EEMAX OR APPROVED EQUAL.

EXECUTION: SLOPE DRAINAGE PIPING INSIDE AND OUTSIDE OF BUILDING IN ACCORDANCE WITH REQUIREMENTS OF THE GOVERNING PLUMBING CODES.

ESTABLISH GRADE LINES WITH SURVEYOR'S LEVEL. VERIFY LOCATION OF SEWER TAPS BEFORE START OF WORK AND MAKE NECESSARY GRADE ADJUSTMENTS. DRAIN VENT LINES BACK TO SOIL LINES.

LOCATE CLEANOUTS AT EACH CHANGE OF LINE DIRECTION OF MORE THAN 45 DEG. WHERE MORE THAN ONE CHANGE OCCURS IN A RUN OF PIPING, ONLY ONE CLEANOUT SHALL BE REQUIRED FOR EACH 40 FT. INTERVAL.

BRING EXTERIOR CLEANOUTS UP TO GRADE AND INSTALL IN 18" X 18" CUBE OF CONCRETE. PROVIDE A CAST IRON COVER OVER EACH EXTERIOR CLEANOUT.

INSTALL WATER PIPING TO AVOID CONTACT WITH STRUCTURE WHEN POSSIBLE TO PREVENT EXCESSIVE WATER HAMMER NOISE TRANSMISSION.

ALL PIPING SHALL BE INSTALLED AT RIGHT ANGLES TO THE BUILDING LINES AND PLUMB.

WRAP METALLIC PIPE IN CONTACT WITH CONCRETE BLOCK, SLABS OR STUCCO WITH 10 MIL THICK PVC TAPE TO PREVENT CORROSION.

FLUSH PIPING CLEAN WITH WATER AFTER INSTALLATION. DISINFECT POTABLE WATER SYSTEM PER CODE, AWWA C651, OR AWWA C652 AND SUBMIT TEST RESULTS.

TEST ALL PIPING PRIOR TO COVERING OR BACKFILLING.

TEST WATER PIPING AT 100 PSIG FOR A CONTINUOUS PERIOD OF NOT LESS THAN FOUR (4) HOURS. DURING THIS TIME, CAREFULLY INSPECT THE SYSTEM FOR LEAKS. CONTRACTOR SHALL REPAIR ALL LEAKS IF NECESSARY AND TEST AGAIN UNTIL NO LEAKAGE IS DETECTED.

TEST SOIL, WASTE AND VENT SYSTEMS BY PLUGGING LINES AND FILLING SYSTEMS WITH WATER TO A STATIC HEAD OF 10 FEET OF WATER. OBSERVE WATER LEVEL FOR A TWO (2) HOUR PERIOD. IF LEVEL IS LOWERED, INDICATING LEAKAGE, REPAIR LEAKS AND TEST AGAIN UNTIL NO FURTHER LEAKAGE IS DETECTED.

HEATING, VENTILATING AND AIR CONDITIONING:

EQUIPMENT: EQUIPMENT CAPACITIES AND CHARACTERISTICS SHALL BE AS SCHEDULED ON THE DRAWINGS. INSTALL AS INDICATED ON DRAWINGS AND AS PER MANUFACTURER'S PRINTED INSTRUCTIONS. AIR CONDITIONING EQUIPMENT MANUFACTURED BY CARRIER, TRANE, LENNOX, DAIKIN, JCI (YORK), RHEEM, RUUD, AMERICAN STANDARD, BRYANT OR DAY & NIGHT IS ACCEPTABLE. DUCTLESS SPLIT SYSTEM EQUIPMENT MANUFACTURED BY CARRIER (TOSHIBA), TRANE, LENNOX, DAIKIN, LG, MITSUBISHI, SANYO, FUJITSU, OR TOSHIBA IS ACCEPTABLE. EXHAUST FANS MANUFACTURED BY GREENHECK, LOREN COOK, TWIN CITY, PENN BARRY, BROAN, DELTA, JENCO OR S & P ARE ACCEPTABLE.

EQUIPMENT IDENTIFICATION: CONTRACTOR SHALL PROVIDE EQUIPMENT TAGS ON ALL MAJOR EQUIPMENT, I.E., AIR CONDITIONERS, EXHAUST FANS, ETC. TAGS SHALL BE BLACK WITH A MINIMUM OF 1' HIGH WHITE LETTERS PERMANENTLY AFFIXED TO THE UNITS. HAND WRITTEN TAGS ARE NOT ACCEPTABLE.

DUCTWORK:

DUCT SIZES: DIMENSIONS ON DRAWINGS ARE SHEET METAL DUCT SIZES. DO NOT INCREASE DUCT SIZE FOR ACOUSTICALLY LINED OR INTERNALLY INSULATED DUCTS.

ALL LOW PRESSURE DUCTWORK SHALL BE CONSTRUCTED WITH A MIN. 2" W.G. PRESSURE CLASSIFICATION AND SEAL CLASS C. SEAL ALL TRANSVERSE JOINTS WITH HARDCAST.

DUCT GAUGES: FABRICATION AND SUPPORT SHALL BE IN ACCORDANCE WITH SMACNA STANDARDS.

ROUND DUCTWORK: GALVANIZED STEEL LOCK FORMING QUALITY, MINIMUM 0.028 INCH THICK CONTINUOUS SPIRAL SEAM. FABRICATE ROUND DUCT ELBOWS OF MINIMUM FIVE (5) PIECE CONSTRUCTION.

GALVANIZED DUCTWORK: GALVANIZED STEEL LOCK FORMING QUALITY HAVING ZINC COATING OF 1.25 OUNCES PER SQUARE FOOT FOR EACH SIDE PER ASTM A653. ALL DUCTWORK SHALL BE GALVANIZED UNLESS OTHERWISE NOTED. ALL DUCTWORK EXPOSED TO WEATHER SHALL BE SEALED (JOINTS AND SEAMS) WITH SILICONE SEALANT. ALL DUCTWORK JOINTS, LONGITUDINAL AND TRANSVERSE SEAMS AND CONNECTIONS IN DUCTWORK MUST BE SECURELY SEALED USING WELDMENTS; MECHANICAL FASTENERS WITH SEALS, GASKETS, OR MASTICS; MESH AND MASTIC SEALING SYSTEMS; OR TAPES. TAPES AND MASTICS MUST BE LISTED AND LABELED IN ACCORDANCE WITH UL 181A OR UL 181B.

FLEXIBLE DUCTS: FLEXIBLE DUCTS SHALL BE INSULATED (MINIMUM 1" THICK, WITH MINIMUM THERMAL RESISTANCE OF R4.2) AND HAVE A FOIL SCRIM VAPOR BARRIER. FLEXIBLE DUCTWORK SHALL BE LISTED AS UL 181 CLASS 1 FLEXIBLE AIR DUCT AND SHALL COMPLY WITH NFPA STANDARDS. PROVIDE FLEXIBLE DUCTWORK AS MANUFACTURED BY MANVILLE, OWEN CORNING, THERMOFLEX, OR EQUIVALENT.

DUCT LINER: ALL RECTANGULAR SUPPLY AND RETURN DUCTWORK TO BE INTERNALLY LINED FOR THERMAL AND/OR ACOUSTICAL PURPOSES SHALL BE 1" THICK WITH A MINIMUM THERMAL RESISTANCE OF R4.2, SUITABLE FOR TEMPERATURE RANGE OF 40 F TO 250 F AND MAXIMUM AIR VELOCITY OF 4000 FPM. INSTALL LINER IN ACCORDANCE WITH SMACNA DUCT LINER APPLICATION STANDARD.

INSULATION: WRAP ALL ROUND SUPPLY AND RETURN DUCTWORK NOT INTERNALLY LINED WITH A MAXIMUM 1-1/2" THICK, FLEXIBLE FIBERGLASS INSULATION HAVING A FACTORY APPLIED FOIL SCRIM KRAFT VAPOR BARRIER. INSULATION SHALL HAVE A MINIMUM THERMAL RESISTANCE OF R4.2 AT 75 F MEAN TEMPERATURE. INSULATION SHALL BE INSTALLED PER MANUFACTURER'S INSTRUCTIONS. DUCT WRAP SHALL BE INSTALLED SO AS TO PROVIDE A UNIFORM THICKNESS. INSULATION SHALL NOT BE COMPRESSED.

DAMPERS: FABRICATE BALANCING DAMPERS OF GALVANIZED STEEL, MINIMUM 16 GAUGE AND PROVIDE WITH LOCKING QUADRANTS. UNLESS INDICATED OTHERWISE, DAMPERS SHALL BE OPPOSED BLADE TYPE.

FLEXIBLE CONNECTION: PROVIDE FLEXIBLE CONNECTIONS AT THE INLET AND OUTLET OF ALL AIR MOVING DEVICES. FABRICATE OF NEOPRENE COATED FLAMEPROOF FABRIC APPROXIMATELY 4_INCH WIDE TIGHTLY CRIMPED INTO METAL EDGING STRIP AND ATTACH TO DUCTING AND EQUIPMENT BY SCREWS OR BOLTS AT 6_INCH INTERVALS. FLEXIBLE CONNECTIONS SHALL BE ASSEMBLED PER MANUFACTURER'S INSTRUCTIONS FOR OPTIMUM SHAPE. FLEXIBLE CONNECTIONS EXPOSED TO THE WEATHER SHALL BE PROVIDED WITH A SHEET METAL WEATHER SHIELD.

TURNING VANES: FABRICATE TURNING VANES AND RAILS OF 24 GAUGE GALVANIZED STEEL AND ASSEMBLE RATTLE FREE. TURNING VANES SHALL BE SINGLE THICKNESS PREFABRICATED OR ASSEMBLED PER MANUFACTURER'S INSTRUCTIONS FOR OPTIMUM SHAPE.

FILTERS: FILTERS SHALL BE 2" THICK PLEATED TYPE, DISPOSABLE, MEDIUM EFFICIENCY, MERV 8, CAMFIL FARR 30/30 OR EQUIVALENT. FILTERS SHALL BE IN PLACE WHENEVER SYSTEMS ARE IN OPERATION. CONTRACTOR SHALL PROVIDE AND INSTALL AN ADDITIONAL SET OF FILTERS FOR EACH UNIT AT THE COMPLETION OF PROJECT.

REFRIGERANT PIPING: REFRIGERANT PIPING SHALL BE CLEANED AND CAPPED TYPE ACR OR TYPE "L" HARD TEMPER COPPER TUBING WITH WROUGHT COPPER FITTINGS. JOINTS SHALL BE SILVER BRAZED WITH INTERNAL CONTINUOUS NITROGEN PURGE. INSULATE ALL REFRIGERANT SUCTION PIPING 1-1/2' AND SMALLER WITH 1/2" THICK ARMSTRONG "ARMAFLEX" INSULATION OR EQUAL. FOR DUCTLESS SPLIT AND VRF SYSTEMS, INSULATE BOTH SUCTION AND LIQUID LINES WITH 1/2' THICK ARMAFLEX OR PER MANUFACTURER MINIMUM REQUIREMENTS. FOR KITCHEN EQUIPMENT SUCTION LINES 1' AND LARGER, PROVIDE 1' THICK INSULATION. ARMAFLEX EXPOSED TO WEATHER SHALL BE COATED WITH TWO COATS OF ARMAFLEX UV PROTECTIVE COATING OR SHALL BE PROVIDED WITH A 0.16' THICK CORRUGATED ALUMINUM JACKET. ALL JOINTS AND SEAMS IN ALUMINUM JACKETING SHALL BE SEALED.

AIR DEVICES: AIR DISTRIBUTION DEVICES SHALL BE AS SCHEDULED ON THE DRAWINGS AND EQUAL TO KRUEGER, TITUS, PRICE, TUTTLE & BAILEY, NAILOR, OR AIR CONCEPTS.

TESTING AND BALANCING: AIR SYSTEMS SHALL BE BALANCED BY CERTIFIED TESTING & BALANCING CONTRACTOR IN ACCORDANCE WITH AABC STANDARDS AND METHODS. SUBMIT AIR BALANCE REPORT ON AABC STANDARD FORMS FOR APPROVAL.

KC MECHANICAL ENGINEERING, L.L.C.
5447 East Fifth Street # 112 520/327-7611
Tucson, Arizona 85711 520/327-0432
Designers Mech: LAB Plumb: ROM Project #: 23-359

STONE- HARDIE PANEL OPTION

BRAMIC DESIGN GROUP PLLC
8003 S. GALILEO LN.
TUCSON, AZ 85747
PHONE: (520) 401-9183

COPYRIGHT NOTICE
This drawing is the property of the above referenced Professional and is not to be used for any purpose other than the specific project and site names herein, and cannot be reproduced in any manner without the express written permission from the Professional.

DATE	ISSUE
05.17.24	ISSUED FOR PERMIT REVIEW SET

	DATE	REVISION
1	07/08/24	COT COMMENTS

PROFESSIONAL SEAL

PROFESSIONAL ENGINEER (MECHANICAL) 25035 KENNETH M. CAWTHORNE ARIZONA U.S.A. DATE SIGNED 5/17/24 Expires 6/30/2026

PROFESSIONAL LICENSE NO:
ARIZONA 15939
CERTIFICATE OF AUTHORIZATION NO:

PROFESSIONAL IN CHARGE
GENE GOLDSTEIN

PROJECT MANAGER
KYLE VILAUBI

QUALITY CONTROL
KYLE VILAUBI, GENE GOLDSTEIN

DRAWN BY
KYLE VILAUBI / JON WADE

1 PROJECT ADDRESS
2920 S. PARK AVE
TUCSON ARIZONA 85713

Valvoline Instant Oil Change

VALVOLINE INSTANT OIL CHANGE

BDG PROJECT NUMBER
23-849

SHEET NAME
MECHANICAL & PLUMBING SPECIFICATIONS

SHEET #
MP-1.1

SYMBOL LEGEND - LIGHTING

SYMBOL	DESCRIPTION
	EXIT LIGHT - CEILING OR WALL MOUNT, BAR DENOTES FACE/ARROWS
	EXIT / EMERGENCY COMBO LIGHT, BAR DENOTES FACE
	EMERGENCY BATTERY PACK WITH BUG-EYE LAMPS
	SURFACE OR RECESSED, LIGHT FIXTURE
	WALL MOUNT LIGHT
	LIGHT FIXTURE
	4' LONG FIXTURE
	1x4 LIGHTING FIXTURE
	STRIP LIGHT FIXTURE
	SITE LIGHT FIXTURE, SQUARE/RECTANGULAR HOUSING
K	"K" BESIDE SYMBOL DENOTES TYPE
a	LOWER CASE LETTER BESIDE SYMBOL DENOTES SWITCHING

SYMBOL LEGEND - LIGHTING CONTROLS

SYMBOL	DESCRIPTION
PC	EXTERIOR PHOTOCELL
TC	TIMECLOCK
OC	CEILING MOUNT OCCUPANCY SENSOR; PROGRAM FOR AUTO OFF AFTER 20 MINUTES OF VACANCY.
$	SINGLE POLE SWITCH WITH MANUAL DIMMING. MOUNT +42" AFF TO BOTTOM OF BOX, UNO
$3	THREE-WAY SWITCH
$D	DUAL TECHNOLOGY OCCUPANCY SENSING DIMMER (ON|OFF) PROGRAMMED FOR AUTO ON/AUTO OFF AFTER 20 MINUTES OF VACANCY WITH MANUAL DIMMING.
$M	MANUAL OPERATED STARTER WITH OVERLOAD ELEMENT

SYMBOL LEGEND - SYSTEMS

SYMBOL	DESCRIPTION
	CCTV CAMERA. PROVIDE BACK BOX, MUD RING, PLASTIC BUSHING AND 3/4"C., TO ACCESSIBLE CEILING SPACE.
	CCTV DOME.

ABBREVIATIONS

MARK	DEFINITION	MARK	DEFINITION
A	AMPERES	MTG	MOUNTING
AFF	ABOVE FINISHED FLOOR	NEC	NATIONAL ELECTRIC CODE
AFG	ABOVE FINISHED GRADE	NFPA	NATIONAL FIRE PROTECTION ASSOCIATION
AIC	AMP INTERRUPT CAPACITY	NM	NONMETALLIC
AL	ALUMINUM	NTS	NOT TO SCALE
BLDG	BUILDING	PC	PHOTOCELL
BKR	BREAKER	PNL	PANEL
C	CONDUIT	PVC	POLYVINYL CHLORIDE
CB	CIRCUIT BREAKER	PWR	POWER
CKT	CIRCUIT	QTY	QUANTITY
CLG	CEILING	REC	RECEPTACLE
EF	EXHAUST FAN	REFR	REFRIGERATOR
ELEC	ELECTRICAL	REQD	REQUIRED
EM	EMERGENCY	RM	ROOM
EMT	ELECTRICAL METALLIC TUBING	SPD	SURGE PROTECTION DEVICE
EQUIP	EQUIPMENT	TC	TIME CLOCK
F	FUSED	TP	TAMPER PROOF
FCO	FULL CUT OFF	TYP	TYPICAL
GFCI	GROUND FAULT CIRCUIT INTERRUPTER	UGE	UNDERGROUND ELECTRICAL
GRD	GROUND	UGT	UNDERGROUND TELEPHONE
HP	HORSEPOWER	UL	UNDERWRITERS LABORATORY
JBOX	JUNCTION BOX	UNO	UNLESS NOTED OTHERWISE
KV	KILOVOLTS	V	VOLTS
KVA	KILOVOLT AMPERES	VA	VOLT AMPERES
LTG	LIGHTING	W	WATTS
LTS	LIGHTS	WH	WATER HEATER
MCB	MAIN CIRCUIT BREAKER	WL	WET LOCATION
MDP	MAIN DISTRIBUTION PANEL	WP	WEATHERPROOF
MECH	MECHANICAL	XFMR	TRANSFORMER
MTD	MOUNTED		

SYMBOL LEGEND - POWER

SYMBOL	DESCRIPTION
	WALL MOUNTED, 125 VOLT, 15 OR 20 AMP DUPLEX RECEPTACLE GE 5252 OR EQUAL. MOUNT AT +18" AFF, UNLESS NOTED OTHERWISE
	DOUBLE DUPLEX RECEPTACLE
	+42"AFF OR ABOVE COUNTER, OR AS OTHERWISE NOTED.
	+42"AFF OR ABOVE COUNTER, OR AS OTHERWISE NOTED.
J	JUNCTION BOX SIZE AND INSTALL PER NEC 314.
	FUSED DISCONNECT SWITCH. SIZE FUSES FOR MOTOR OVERLOAD PROTECTION PER NEC ARTICLE 430. F DENOTES SWITCH SIZE.
▼	WALL MOUNTED TELE/DATA OUTLET, MOUNT @ 48" AFF UNO PROVIDE SINGLE GANG 4" SQUARE BOX WITH QUAD MUD RING, AND PLASTIC BUSHING. RUN 1-1/4"C STUB WITH PULL STRING TO ACCESSIBLE CEILING SPACE.
▽	WALL MOUNTED TELE/DATA OUTLET, MOUNT @ 18" AFF UNO PROVIDE SINGLE GANG 4" SQUARE BOX WITH QUAD MUD RING AND PLASTIC BUSHING. RUN 1-1/4"C. STUB WITH PULL STRING TO ACCESSIBLE CEILING SPACE.
S T	THERMOSTAT, PROVIDE 3/4" CONDUIT TO ASSOCIATED MECHANICAL EQUIPMENT
	PANEL BOARD, SURFACE MOUNT, REFER TO PANEL SCHEDULE
	UTILITY TRANSFORMER (XFMR) - SITE PLANS
	TRANSFORMER (XFMR) - ONE LINE DIAGRAM
	CIRCUIT BREAKER
	GROUND

GENERAL NOTES

1. VERIFY DIMENSIONS FROM ARCHITECTURAL DRAWINGS.
2. INSTALL FIXTURES ON ACOUSTICAL TILE MODULES UNLESS OTHERWISE INDICATED.
3. OUTLET DIMENSIONS SHALL COMPLY WITH ADA REACH & HEIGHT REQUIREMENTS.
4. CIRCUITING INDICATED IS TO SHOW SWITCHING ETC. NOT QUANTITY OR EXACT LOCATION.
5. VERIFY EXACT LIGHT FIXTURE LOCATION IN COORDINATION WITH OTHER TRADES AND RELOCATE AS NECESSARY FOR EXPOSED DUCTS, PIPING, ETC. AS DIRECTED.
6. PROVIDE SILK SCREEN PRINTED CIRCUIT LABELS FOR ALL RECEPTACLES AND DATA OUTLETS. PROVIDE ENGRAVED ACRYLIC NAMEPLATES FOR ALL PANELBOARDS AND DISCONNECTS. DISCONNECTED NAMEPLATE SHALL INCLUDE NAME OF UNIT AS WELL AS CIRCUIT FEEDING UNIT. LOCATE DATA OUTLETS NO MORE THAN 2" FROM CORRESPONDING RECEPTACLE.
7. VERIFY EXACT LOCATION FOR ELECTRICAL WATER COOLER OUTLETS.
8. VERIFY FURNITURE, EQUIPMENT, ETC., MOUNTED OUTLET LOCATIONS WITH EQUIPMENT SUPPLIER PRIOR TO ROUGH-IN.
9. COMPLY WITH NEC 408.4(A). CLEARLY IDENTIFY CIRCUITS ON PANEL DIRECTORIES TO INCLUDE LOCATION SERVED AS WELL AS ITEM (I.E. REC - HALL 102)

DEVICE MOUNTING HEIGHTS

HEIGHTS ARE AFF AND TO CENTERLINE OF THE INSTALLED DEVICE, UNO. ADJUST THE J-BOX MOUNTING HEIGHT ACCORDINGLY. COORDINATE WITH ARCHITECTURAL PRIOR TO ROUGH-IN.

RECEPTACLES, TELE/DATA - GENERAL PURPOSE	+18" AFF
SWITCHES, DIMMERS, OTHER CONTROLS	+46" AFF
RECEPTACLES - TTB OR DTB	+46" AFF
RECEPTACLES, TELE/DATA - ABOVE COUNTER	+42" AFF
TIME SWITCHES	+60" AFF

PER NEC 511.2 THIS LOCATION IS CLASSIFIED AS A MINOR REPAIR GARAGE, AND VENTILATION IN THE PIT AREAS MEETS THE REQUIREMENTS OF NEC TABLE 511.3(C). THEREFORE THIS AREA QUALIFIES AS AN UNCLASSIFIED LOCATION AND NOT AS HAZARDOUS PER NEC.

7536 N. La Cholla Blvd.
Tucson, Arizona 85741
Phone (520) 622-2196
Fax (520) 622-2198
www.eda-az.com
Project #: 23110

THESE DOCUMENTS ARE INSTRUMENTS OF SERVICE AND PROTECTED BY COPYRIGHT. THESE DOCUMENTS ARE NOT TO BE REPRODUCED, CHANGED OR USED FOR ANY PURPOSE OTHER THAN ORIGINALLY INTENDED UNLESS AUTHORIZED, IN WRITING BY ELECTRICAL DESIGN ASSOCIATES, INC.

Hardi-Brick OPTION

BRAMIC DESIGN GROUP PLLC
8003 S. GALILEO LN.
TUCSON, AZ 85747
PHONE: (520) 401-9183

COPYRIGHT NOTICE
This drawing is the property of the above referenced Professional and is not to be used for any purpose other than the specific project and site names herein, and cannot be reproduced in any manner without the express written permission from the Professional.

DATE	ISSUE
05.17.24	ISSUED FOR PERMIT REVIEW SET

DATE	REVISION

PROFESSIONAL SEAL

Registered Professional Engineer (Elec.)
CERTIFICATE NO.
32749
SARAH JEWETT LESKA
Date Signed 09/30/2022
ARIZONA, U.S.A.
EXPIRES 09/30/2023

PROFESSIONAL IN CHARGE
SLL

PROJECT MANAGER
SLL/KY

QUALITY CONTROL
SLL/KY

DRAWN BY
KY/RW/RJJ

PROJECT ADDRESS
2920 S. PARK AVE
TUCSON ARIZONA 85713

VALVOLINE INSTANT OIL CHANGE

BDG PROJECT NUMBER
23-849

SHEET NAME
ELECTRICAL SYMBOLS, NOTES & ABBREVIATIONS

SHEET #
E-0.0

ELECTRICAL NOTES

1. COMPLY WITH OR EXCEED THE REQUIREMENTS OF THE LATEST EDITION OF THE NATIONAL ELECTRICAL CODE, AND APPLICABLE LOCAL, STATE, AND FEDERAL ORDINANCES. OBTAIN ALL REQUIRED STATE AND LOCAL PERMITS AND ASSOCIATED FEES.
2. COMPLY WITH ARIZONA REVISED STATUTES TITLE 44, CHAPTER 9, AS AMENDED BY ARTICLE 19.
3. VERIFY CEILING SYSTEM COMPATIBILITY WITH LIGHTING FIXTURES BEFORE RELEASING FIXTURE ORDER.
4. FLUSHMOUNT WIRING DEVICES, SWITCHES, RECEPTACLES, ETC., UNO
5. COVER PLATES SHALL BE STAINLESS STEEL.
6. ILLUMINATED EXIT SIGNS SHALL HAVE AN INPUT POWER DEMAND OF FIVE WATTS OR LESS PER ILLUMINATED FACE AND SHALL EITHER HAVE A POWER FACTOR OF AT LEAST 0.70 OR MEET THE POWER FACTOR PRODUCT SPECIFICATION OF THE ENERGY STAR PROGRAM REQUIREMENTS, WHICHEVER IS HIGHER.
7. COORDINATE WITH OTHER TRADES TO AVOID CONFLICTS AND TO VERIFY EQUIPMENT CONNECTIONS, AND FOR COMPLETE INSTALLATION AND CONNECTION.
8. INSTALL A COMPLETE ELECTRICAL SYSTEM PER CONTRACT DRAWINGS AND ENSURE THAT THE SYSTEM IS OPERATIONAL UPON JOB COMPLETION.
9. COORDINATE ALL WIRING DEVICE LOCATIONS AND ELEVATIONS INDICATED ON PLANS WITH THE OWNER, ARCHITECT AND FINAL FURNITURE/EQUIPMENT LAYOUTS.
10. A) FURNISH AND INSTALL ALL BRANCH CIRCUIT WIRING IN ACCORDANCE WITH NATIONAL ELECTRICAL CODE AND THIS DRAWING.
    B) MAXIMUM LOAD PER 20A/1P CIRCUIT: 1920 WATTS (120V).
    C) VOLTAGE DROP SHALL BE LIMITED TO 3% ON ALL BRANCH CIRCUITS.
11. A) INSTALL CONDUIT WITH SIZES AS INDICATED OR REQUIRED RIGIDLY SECURED IN PLACE WITH NOT LESS THAN ONE MALLEABLE, CORROSION PROOF, ALLOY STRAP OR HANGER PER EIGHT FEET OF CONDUIT. PERFORATED STRAPPING IS NOT ACCEPTABLE.
    B) SUPPORT CONDUITS FROM STRUCTURAL SLABS, WALLS, STRUCTURAL MEMBERS AND ROOF JOISTS. DO NOT SUPPORT CONDUITS FROM CEILING TIE WIRES, DUCTWORK, PIPING OR OTHER NONSTRUCTURAL MEMBERS.
12. A) INDEPENDENTLY AND SECURELY MOUNT WALL AND CEILING FIXTURES SO THAT THEY ARE NOT DEPENDENT ON CEILING FINISH FOR SUPPORT AND CANNOT BE ROTATED OR DISPLACED.
    B) FIXTURES AND DEVICES MOUNTED IN SUSPENDED ACOUSTICAL TILE SHALL HAVE CHANNEL SUPPORTS ACROSS THE MAIN GRID RUNNERS OR GRID SUPPORTS, SECURELY TIED DOWN OR ANCHORED SO AS NOT TO CAUSE TILE TO SAG AND SO THAT FIXTURE OR DEVICE CANNOT BE LIFTED, ROTATED OR DISPLACED. MINIMUM SUPPORTS SHALL INCLUDE 2 CHAINS AT DIAGONALLY OPPOSITE CORNERS.
    C) PROVIDE AND INSTALL GRID TROFFER SUPPORT CLIPS.
13. PANELBOARDS: COPPER BUS
    A) PROVIDE BREAKERS BOLTED IN PLACE. BREAKERS TO HAVE MINIMUM 10,000 AIC RATING. MULTI-POLE BREAKERS WITH COMMON TRIP SHALL BE FURNISHED WITH 4 BREAKER LOCK-ONE FOR EACH BRANCH CIRCUIT PANELBOARD.
    B) BALANCE PANEL FEEDERS WITHIN 5% UNDER FULL LOAD CONDITIONS.
    C) VERIFY ELECTRICAL REQUIREMENTS FOR MOTORS AND EQUIPMENT PRIOR TO ORDERING BREAKERS FOR PANELBOARDS.
    D) PROPERLY FILL IN CIRCUIT DIRECTIONS WITH A COMPUTER PRINTED SCHEDULE AT THE COMPLETION OF THE JOB, WITH DESIGNATIONS AS DETERMINED BY ARCHITECT.
14. MOUNT OUTLET BOXES FLUSH AND CONCEAL CONDUIT UNO ROUTING AND METHODS USED TO ACHIEVE CONCEALED AND FLUSH EQUIPMENT INSTALLATION ARE THE RESPONSIBILITY OF THE CONTRACTOR. COORDINATE WITH OTHER AFFECTED TRADES. SEE SPECIFICATIONS FOR CUTTING AND PATCHING.
15. DEFINITIONS: FURNISH - OBTAIN, PAY FOR AND DELIVER TO THE WORK SITE.
    INSTALL - TRANSPORT, CONNECT, TEST AND PLACE IN OPERATION.
    PROVIDE - FURNISH AND INSTALL.
    INDICATED - PORTRAYED BY PRINTED OR GRAPHIC MEANS.
16. PROVIDE PULL STRING IN ALL SPARE/EMPTY CONDUITS (TYPICAL).

ELECTRICAL NOTES

A. THE SCOPE OF THE WORK COVERED BY THESE SPECIFICATIONS INCLUDES LABOR, EQUIPMENT, AND MATERIALS FOR THE COMPLETE ELECTRICAL SYSTEM. MATERIALS AND EQUIPMENT ARE NEW, OF MANUFACTURER'S STANDARD CONSTRUCTION, INSTALLED IN ACCORDANCE WITH ACCEPTED PRACTICE. RESPONSIBILITY CONTINUES FOR CORRECTION OF DEFECTIVE MATERIAL AND WORK DISCLOSED DURING THE GUARANTEE PERIOD OR THE FIRST OPERATING SEASON. THE DRAWINGS AND SPECIFICATIONS ARE COOPERATIVE AND SUPPLEMENTARY, AND IT IS THE INTENT OF BOTH DRAWINGS AND SPECIFICATIONS TO COVER THE ELECTRICAL REQUIREMENTS AS NEARLY AS POSSIBLE. CLOSELY CHECK THE DRAWINGS AND SPECIFICATIONS FOR ANY OBVIOUS CONFLICTS, ERRORS OR OMISSION AND NOTIFY THE ENGINEER OF ANY PRIOR TO THE RECEIPT OF BIDS. PROPERLY ADJUST THE VARIOUS ELECTRICAL DEVICES, BALANCE PHASES, MAKE THE REQUIRED TESTS, ETC., UNTIL THE ENTIRE ELECTRICAL INSTALLATION FUNCTIONS PROPERLY IN EVERY DETAIL.

B. RACEWAYS - PROVIDE CONDUIT OF TYPES AND SIZES INDICATED WITH FITTINGS AND ACCESSORIES FOR A COMPLETE SYSTEM. USE 3/4" TRADE SIZE MIN. AND SECURITY SUPPORT USING BOLTED CLAMP TYPE HANGERS, LIKE MINERALLAC OR CHANNEL TYPE LIKE B-LINE.
GALVANIZED RIGID STEEL CONDUIT - FOR: PANEL FEEDERS, WET LOCATIONS, WHERE SUBJECT TO ABUSE, WHERE 2-1/2" TRADE SIZE OR LARGER IS INDICATED.

C. ELECTRICAL METALLIC TUBING (EMT) - FOR PROTECTED, DRY LOCATIONS, BRANCH CIRCUITS AND COMMUNICATION RACEWAY UP TO 2" TRADE SIZE. USE STEEL BODY COMPRESSION TYPE COUPLINGS AND CONNECTORS (SET-SCREW AND DIE CAST ARE NOT ACCEPTABLE) NON-METALLIC CONDUIT (SCHEDULE 40 PVC) - BELOW GRADE, EXTERIOR OF BUILDING ONLY.

D. WIRE AND CABLE - PROVIDE COPPER CONDUCTOR OF INDICATED TYPE/SIZE. RUN ALL WIRE IN CONDUIT, UNO USE 2 #12, #12 GRD. MIN.
TYPE THHN/THWN FOR #6 AWG AND SMALLER EXCEPT FOR WIRE BELOW GRADE. TYPE XHHW FOR LARGER THAN #6 AWG AND FOR ALL WIRE BELOW GRADE.

E. BOXES AND FITTINGS - PROVIDE BOXES AND FITTINGS OF APPROPRIATE TYPE FOR EACH APPLICATION. USE: APPLETON, O.Z./GEDNEY, HUBBELL.
EXTERIOR (WEATHERPROOF) BOXES - CAST METAL, CORROSION RESISTANT, THREADED CONDUIT ENTRY, WITH MATING COVERS AND GASKETS. FOR EXTERIOR USE HUBBELL #5221 FIBERGLASS/PLASTIC COVER FOR DUPLEX RECEPTACLE. INTERIOR BOXES SHALL BE 4" MIN. SQUARE FITTED WITH SQUARE CUT DEVICE RING OR SINGLE PIECE MASONARY TYPE, NON-GANGABLE AND SET FLUSH WITH FINISHED SURFACE.
JUNCTION AND PULL BOXES - PROVIDE CODE-GAGE, GALVANIZED SHEET STEEL APPROPRIATE FOR EACH APPLICATION. CONSTRUCT WITH WELDED SEAMS AND SCREW COVERS ATTACHED WITH STAINLESS STEEL FASTENERS.

F. WIRING DEVICES - PROVIDE WHERE INDICATED WHITE WIRING DEVICES OF CONFIGURATION RATING AND TYPE. USE: G.E., LEVITON OR HUBBELL.
DUPLEX RECEPTACLE - U.L. LISTED AS FED SPEC COMPLIANT, 20-AMP, 125V, 3-WIRE, 2-POLE WITH GROUND, WITH METAL PLASTER EARS; SPRING LOADED, SCREW ACTIVATED PRESSURE PLATE TERMINALS. BACK AND SIDE WIRED WITH GROUND TERMINAL BONDED TO MOUNTING YOKE. MOUNT WITH GROUND TERMINAL UP.

G. GROUND FAULT CIRCUIT INTERRUPTER (GFCI) - 20 AMP GFCI, NON-FEED THRU 120 VOLT, SOLID STATE, 5 MILLIAMP TRIP LEVEL, HUBBELL #GF5262 OR EQUAL.

H. MOTOR AND CIRCUIT DISCONNECTS - PROVIDE PROPER HP, VOLTAGE AND CURRENT RATING & NEMA TYPE DISCONNECT. FURNISH WITH OVERCURRENT PROTECTION AND OTHER ACCESSORIES AS INDICATED. USE NEMA 3R ENCLOSURE IN WET LOCATIONS. USE: SQUARE D OR G.E.,.
SWITCH TYPE - HEAVY DUTY, SHEET STEEL ENCLOSED, 2, 3 OR 4 POLE, QUICK-BREAK, VISIBLE BLADE, INTERLOCKED DOOR, PAD LOCK LOCKOUT PROVISION HIGH CONDUCTIVITY COPPER CURRENT CARRYING PARTS, SILVER TUNGSTEN CONTACTS, POSITIVE PRESSURE/SPRING ASSISTED FUSE CLIPS (FUSED TYPES).

I. FUSES - PROVIDE PROPER SELECTION OF FUSE(S) FOR EACH APPLICATION INDICATED AND WITH RESPECT TO VOLTAGE, CURRENT LIMIT, TIME/CURRENT CHARACTERISTICS, AND AVAILABLE FAULT CURRENT. FURNISH PRODUCTS OF ONE OF THE FOLLOWING BUSSMAN, GOULD OR LITTLEFUSE.
UL CLASS RK1 - 250 OR 600 VOLT RATING, 0-600 AMPERES. USE FOR PROTECTION OF CIRCUIT BREAKER PANELBOARDS.

J. INSTALLATION - INSTALL COMPLETE RACEWAY SYSTEM IN PROGRESS WITH OTHER TRADES AND PRIOR TO PULLING WIRE/CABLE. FOLLOW NECA GUIDELINES FOR NEAT, FIRST CLASS WORKMANSHIP. SELECT PROPER SUPPORTS AND ANCHORS AND ALLOW AIR SPACE WHEN MOUNTING TO MASONRY OR CONCRETE SURFACES. WIRE LANDED ON BACK-WIRED DEVICES AND CLAMP TYPE TERMINAL BLOCKS DO NOT REQUIRE CRIMPED LUGS. MOUNT WITH TOP AT 66". SELECT FUSES BASED ON NAME PLATE RATING OR OTHER MANUFACTURER'S RECOMMENDATION WHEN AVAILABLE AND INSTALL IN EACH FUSIBLE DEVICE. PLACE INTUMESCENT FILL MATERIAL IN PENETRATIONS OF FIRE RATED ASSEMBLIES. MARK PANELBOARDS WITH ACRYLIC ENGRAVED NAMEPLATES, PANEL DESIGNATION ABOVE DOOR AND INSIDE OF DOOR WITH PANEL DESIGNATION, VOLTAGE AND FEEDER DESIGNATION. MARK STARTERS, DISCONNECTS, ETC. WITH UNIT DESIGNATION, EQUIPMENT SERVED, VOLTAGE AND FEED CIRCUIT. APPLY FOLLOWING FINISH PAINTING AS APPLICABLE. BLUNT SCREW POINTS AFTER INSTALLATION TO PREVENT INJURY.

K. GROUND THE ELECTRICAL SYSTEM. PROVIDE WIRE, CABLE, LUGS, CLAMPS, SURGE ARRESTORS AND RELATED PRODUCTS AS REQUIRED FOR A COMPLETE GROUNDING SYSTEM. PROVIDE EQUIPMENT GROUNDING CONDUCTOR IN ALL CONDUITS. SIZE WIRE ACCORDING TO THE NEC.

VALVOLINE ELECTRICAL NOTES

A. GUARANTEE COMPLETE SYSTEM FOR A PERIOD OF ONE (1) YEAR AFTER DATE OF ACCEPTANCE BY OWNER. ANY WORK, MATERIAL, OR EQUIPMENT FOUND TO BE FAULTY DURING THAT PERIOD SHALL BE CORRECTED IMMEDIATELY UPON WRITTEN NOTIFICATION, AT THE EXPENSE OF THE ELECTRICAL CONTRACTOR.

B. VERIFY POWER AND TELEPHONE REQUIREMENTS FROM PROPERTY LINE OR POINT OF SERVICE TO BUILDING WITH RESPECTIVE UTILITY COMPANIES. INCLUDE COSTS TO FURNISH A COMPLETE POWER AND TELEPHONE SYSTEM.

C. PROVIDE LABOR AND MATERIAL REQUIRED TO INSTALL UNDERGROUND ELECTRICAL SERVICE TO MAIN SWITCH AT METER BASE. PAY FOR ALL COSTS INCURRED IN SUPPLYING NEW ELECTRICAL SERVICE TO BUILDING INCLUDING ALL FEES, PERMITS AND WORK TO BE PERFORMED BY UTILITY COMPANY.

D. PROVIDE ALL POWER AND CONTROL WIRES, PRIMARY & SECONDARY CONDUITS, CONDUCTORS, TRENCHING, BACKFILL, CONCRETE PADS. OUTLETS. ETC. REQUIRED BY SERVING UTILITY COMPANIES. VERIFY LOCATION, ROUTE AND TERMINATION REQUIREMENTS WITH UTILITY COMPANIES AND THEIR REQUIREMENTS SHALL BE DEEMED PART OF THE CONTRACTORS BID.

E. PROVIDE MATERIALS AND LABOR REQUIRED TO RENDER MECHANICAL AND OTHER EQUIPMENT COMPLETE AND OPERATIVE. VERIFY REQUIREMENTS AND LOCATION OF EQUIPMENT AND CONTROLS FOR EACH PIECE OF EQUIPMENT PRIOR TO ROUGH-IN. IF SEQUENCE OF CONTROLS IS CHANGED FROM DESIGN, COORDINATE WITH OTHER TRADES FOR ADDITIONS AND DELETIONS.

F. BUILDING REQUIRES INCOMING TELEPHONE LINES. TELEPHONE COMPANY TO WIRE BUILDING WITH 6 PAIR TWISTED CABLE FROM TELEPHONE PANEL TO EACH OUTLET WITH A RJ-21X JACK. PROVIDE #6 GROUND FROM TELEPHONE PANEL TO PANEL "LP". PROVIDE COMPLETE TELEPHONE SYSTEM WITH DIAL TONE IN BUILDING. (TELEPHONE HANDSETS BY OWNER) PAY FOR COSTS INCURRED IN SUPPLYING TELEPHONE SERVICE TO BUILDING INCLUDING FEES, PERMITS AND WORK TO BE PERFORMED BY UTILITY COMPANY.

G. MATERIALS AND EQUIPMENT SHALL BE NEW, FREE FROM DEFECTS AND THE BEST GRADE AND MANUFACTURE THROUGHOUT FOR EACH CLASS OR GROUP OF EQUIPMENT, AND LISTED BY UNDERWRITERS LABORATORY AND BEAR THE INSPECTION LABEL WHERE SUBJECT TO SUCH APPROVAL. MATERIALS SHALL MEET WITH THE APPROVAL OF THE DIVISION OF INDUSTRIAL SAFETY AND ALL GOVERNING BODIES HAVING JURISDICTION. MATERIALS SHALL BE MANUFACTURED IN ACCORDANCE WITH APPLICABLE STANDARDS ESTABLISHED BY ANSI, NEMA, AND NSFU.

H. FURNISH AND INSTALL AS SHOWN ON DRAWINGS EQUAL TO: PANELBOARDS: SQUARE D TYPE NQO/QO WITH FULL SIZED BOLT-ON TYPE BREAKERS AND COPPER BUSSING. TANDEM OR PIGGY BACK BREAKERS NOT ALLOWED.

I. MOUNTING HEIGHTS GIVEN ARE FROM FINISHED FLOOR TO CENTERLINE OF OUTLET.

J. EXTERIOR EQUIPMENT SHALL BE WEATHERPROOF.

K. FURNISH AND INSTALL LIGHT FIXTURES COMPLETE WITH LAMPS, DIFFUSERS, WIRE GUARDS, OR OTHER ACCESSORIES AS INDICATED ON DRAWINGS. FIXTURES SHALL BE SUBSTANTIALLY SUPPORTED FROM STRUCTURE ABOVE AND SHALL BE PROVIDED WITH ALL NECESSARY HANGER, SUPPORT, AND ACCESSORY DEVICES REQUIRED.

L. TIME SWITCH SHALL BE DIGITAL/ELECTRONIC 7 DAY, 24 HOUR, FOR BUILDING LIGHTS, SIGNAGE, AND SITE LIGHTING.

M. LOCATE THERMOSTATS AS PER MECHANICAL PLAN IN OFFICE AREA. FURNISH AND WIRE BYPASS TIMER AND TIME SWITCH PER MECHANICAL PLANS.

N. INSTALL GROUND WIRE IN BRANCH CIRCUITS. CONNECT SERVICE GROUND AT MAIN SERVICE PANEL TO BUILDING STEEL, TO MAIN COLD WATER METAL PIPE AND TO 5/8" X 8'-0" COPPERWELD GROUND WELD.

O. POWER AND CONTROL WIRING FOR THE BAY DOORS SHALL BE PROVIDED AND INSTALLED.

BRAMIC DESIGN GROUP PLLC
8003 S. GALILEO LN.
TUCSON, AZ 85747
PHONE: (520) 401-9183

COPYRIGHT NOTICE
This drawing is the property of the above referenced Professional and is not to be used for any purpose other than the specific project and site names herein, and cannot be reproduced in any manner without the express written permission from the Professional.

DATE	ISSUE
05.17.24	ISSUED FOR PERMIT REVIEW SET

DATE	REVISION

PROFESSIONAL SEAL

Registered Professional Engineer (Elec)
CERTIFICATE NO. 32749
SARAH JEWETT LESKA
Date Signed 05/17/2024
ARIZONA, U.S.A.
EXPIRES 09/30/2025
Sarah J. Leska

PROFESSIONAL IN CHARGE
SLL

PROJECT MANAGER
SLL/KY

QUALITY CONTROL
SLL/KY

DRAWN BY
KY/RW/RJJ

PROJECT ADDRESS
2920 S. PARK AVE
TUCSON ARIZONA 85713

Valvoline
Instant Oil Change

VALVOLINE INSTANT OIL CHANGE

BDG PROJECT NUMBER
23-849

SHEET NAME
ELECTRICAL NOTES

SHEET #
E-0.1

7536 N. La Cholla Blvd.
Tucson, Arizona 85741
Phone (520) 622-2196
Fax (520) 622-2198
www.eda-az.com
Project #: 23110
EDA

THESE DOCUMENTS ARE INSTRUMENTS OF SERVICE AND PROTECTED BY COPYRIGHT. THESE DOCUMENTS ARE NOT TO BE REPRODUCED OR UTILIZED FOR ANY PURPOSE OTHER THAN ORIGINALLY INTENDED WITHOUT AUTHORIZED, IN WRITING BY ELECTRICAL DESIGN ASSOCIATES, INC.

Hardi-Brick OPTION

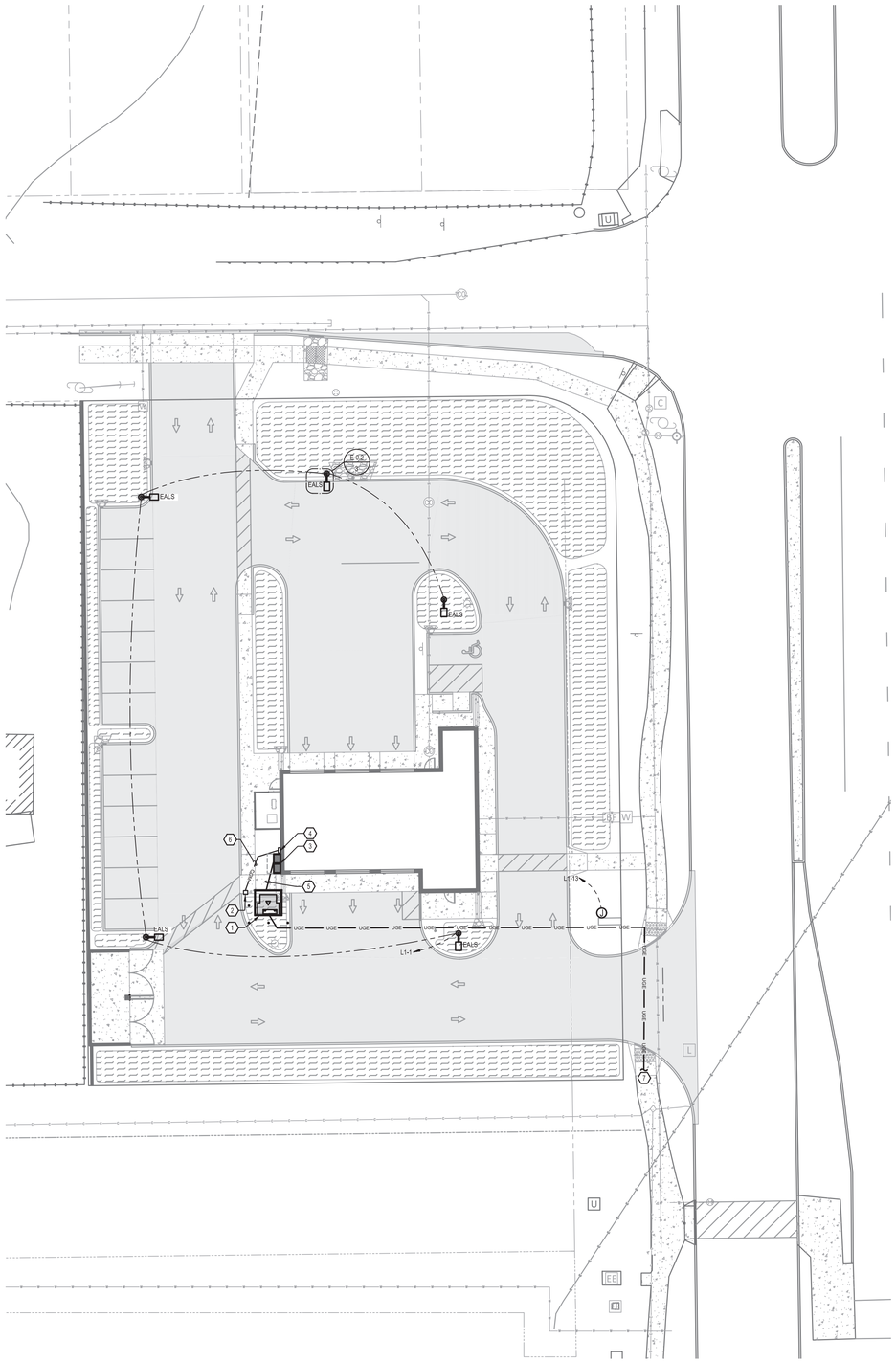

1 E-0.2 ELECTRICAL SITE PLAN
Scale: 1" = 20'-0"

KEY NOTES:

1. UTILITY PADMOUNT TRANSFORMER. PROVIDE CONCRETE PAD PER UTILITY CO. REQUIREMENT. PROVIDE PROTECTIVE BARRIERS IN ACCORDANCE WITH TEP SR-230.
2. TELEPHONE DEMARC.
3. ELECTRICAL SERVICE ENTRANCE EQUIPMENT.
4. TELEPHONE SERVICE ENTRANCE EQUIPMENT.
5. SECONDARY U.G.E. SEE ONE LINE DIAGRAM.
6. PROVIDE (1) 4"C. WITH 200 LB. PULL STRING FOR TELEPHONE.
7. APPROXIMATE UTILITY COMPANY PRIMARY CONNECT. PROVIDE BID ALLOWANCE OF ADDITIONAL 400' FOR PRIMARY CONDUIT AND UTILITY CHARGES. NOTE AS SEPARATE LINE ITEM ON BID NOTED AS "ELECTRIC UTILITY PRIMARY".

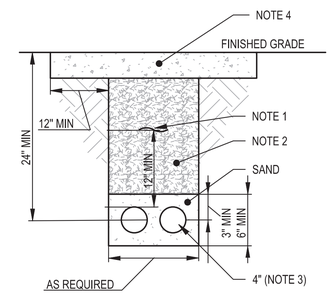

2 E-0.2 DIRECT BURIED CONDUIT
Scale: NOT TO SCALE

NOTES:

1. RED UNDERGROUND METALLIC DETECTABLE WARNING TAPE STATING "BURIED ELECTRICAL LINE BELOW".
2. SELECT BACKFILL TO 95% ORIGINAL COMPACTION DENSITY.
3. CONDUITS SHALL BE SCHEDULE 40 PVC WITH INSIDE DIAMETER AS INDICATED.
4. CONCRETE REPAIR SECTION. COORDINATE EXACT TRENCHING REQUIREMENTS WITH UTILITY, SITE CONDITIIONS AND CIVIL DRAWINGS.

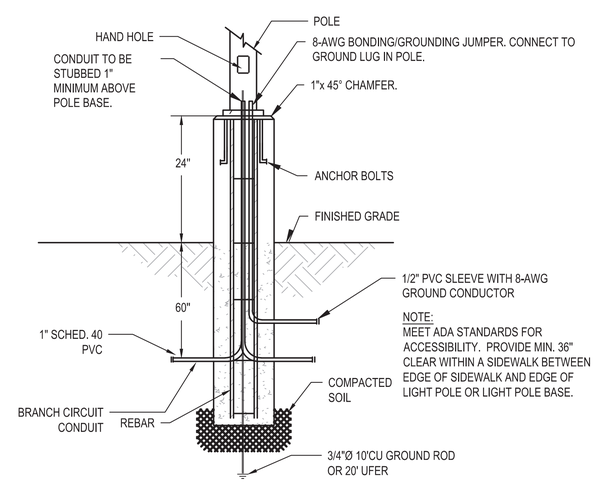

NOTE:
MEET ADA STANDARDS FOR ACCESSIBILITY. PROVIDE MIN. 36" CLEAR WITHIN A SIDEWALK BETWEEN EDGE OF SIDEWALK AND EDGE OF LIGHT POLE OR LIGHT POLE BASE.

NOTES:

1. REFER TO DETAIL ON STRUCTURAL DRAWINGS FOR FOOTING DEPTH, CONCRETE TYPE, AND REINFORCEMENT.
2. SEE STRUCRTURAL FOR POLE BASE DETAILS AND CALCULATIONS

3 E-0.2 POLE & GROUNDING DIAGRAM
Scale: NOT TO SCALE

GENERAL ELECTRICAL SITE NOTES:

A. PAY FEES AND OTHER COSTS TO PROVIDE A COMPLETE NEW ELECTRICAL SERVICE.

B. PAY FEES AND OTHER COSTS TO PROVIDE A COMPLETE NEW TELEPHONE SERVICE.

C. PROVIDE CONDUIT WITH 200LB. PULLSTRING FROM TRANSFORMER TO SERVICE ENTRANCE EQUIPMENT. COORDINATE ALL REQUIREMENTS WITH LOCAL UTILITY COMPANY PRIOR TO TRENCHING. COORDINATE UTILITY CONNECTION DATE IMMEDIATELY UPON AWARD OF CONTRACT TO ALLEVIATE UTILITY DELAYS DURING CONSTRUCTION.

D. BACKFILL EXCAVATION OF WALKS, DRIVES AND PARKING AREAS WITH COMPACTED BANK RUN GRAVEL OR SAND.

E. EXTERIOR RECEPTACLES SHALL BE GFCI, WP WITH PLUG INSERTED.

F. PROVIDE 1"C., 2 #10, #10 GRD FOR ALL SITE LIGHTING CIRCUITS.

G. COORDINATE EXACT LOCATION OF UGE WORK WITH CIVIL ENGINEERING DRAWINGS/DOCUMENTS, OTHER SITE UTILITIES, AND SITE CONTRACTOR(S).

H. DIRECT BURIED CONDUIT FOR SITE LIGHTING SHALL BE SCHEDULE 40 PVC, UNO. PROVIDE RGS ELBOWS FOR SITE LIGHTING POLES.

I. INCLUDE IN BID ELECTRIC UTILITY COMPANY CHARGES ASSOCIATED WITH PROVIDING SERVICE TO THE BUILDING, INCLUDING, BUT NOT LIMITED TO, THE FOLLOWING: TRANSFORMERS, CONCRETE PADS/VAULTS, CABLES, DUCTS, TRENCHING, BACKFILL, CONCRETE ENCASEMENT, METERING, GROUNDING, ANCILLARY EQUIPMENT & DEVICES, ETC., AND ASSOCIATED LABOR FOR A COMPLETE INSTALLATION PER N.E.C. AND ELECTRIC UTILITY COMPANY REQUIREMENTS.

J. ROCK AND/OR ADVERSE SOIL CONDITIONS MAY BE PRESENT ON SITE. COORDINATE INSTALLATION REQUIREMENTS FOR ALL BELOW GRADE WORK WITH GEOTECHNICAL REPORT, AND SHALL INCLUDE IN BID ANY WORK RELATED TO GEOTECHNICAL CONSIDERATIONS AS IT MAY PERTAIN TO THE INSTALLATION OF SITE ELECTRICAL WORK INCLUDING, BUT NOT LIMITED TO: DUCTBANKS, FOUNDATIONS/FOOTERS, CONCRETE SLABS/PADS, VAULTS, DIRECT BURIED CABLES OR CONDUITS, SITE LIGHTING POLE BASES, ETC.

BRAMIC DESIGN GROUP PLLC
8003 S. GALILEO LN.
TUCSON, AZ 85747
PHONE: (520) 401-9183

COPYRIGHT NOTICE
This drawing is the property of the above referenced Professional and is not to be used for any purpose other than the specific project and site names herein, and cannot be reproduced in any manner without the express written permission from the Professional.

DATE	ISSUE
05.17.24	ISSUED FOR PERMIT REVIEW SET

DATE	REVISION

PROFESSIONAL SEAL

Registered Professional Engineer (Elec)
CERTIFICATE NO. 32749
SARAH JEWETT LESKA
Date Signed 05/16/24
ARIZONA, U.S.A.
EXPIRES 09/30/2025
Sarah J. Leska

PROFESSIONAL IN CHARGE
SLL

PROJECT MANAGER
SLL/KY

QUALITY CONTROL
SLL/KY

DRAWN BY
KY/RW/RJJ

PROJECT ADDRESS
2920 S. PARK AVE
TUCSON ARIZONA 85713

VALVOLINE INSTANT OIL CHANGE

BDG PROJECT NUMBER
23-849

SHEET NAME
ELECTRICAL SITE PLAN AND DETAILS

SHEET #
E-0.2

Contact Arizona 811 at least two full working days before you begin excavation
ARIZONA811
Call 811 or click Arizona811.com

7536 N. La Cholla Blvd.
Tucson, Arizona 85741
Phone (520) 622-2196
Fax (520) 622-2198
www.eda-az.com
EDA

Project #: 23110

THESE DOCUMENTS ARE INSTRUMENTS OF SERVICE AND PROTECTED BY COPYRIGHT. THESE DOCUMENTS MAY NOT BE REPRODUCED OR UTILIZED FOR ANY PURPOSE OTHER THAN ORIGINALLY INTENDED UNLESS AUTHORIZED, IN WRITING BY ELECTRICAL DESIGN ASSOCIATES, INC.

Hardi-Brick OPTION

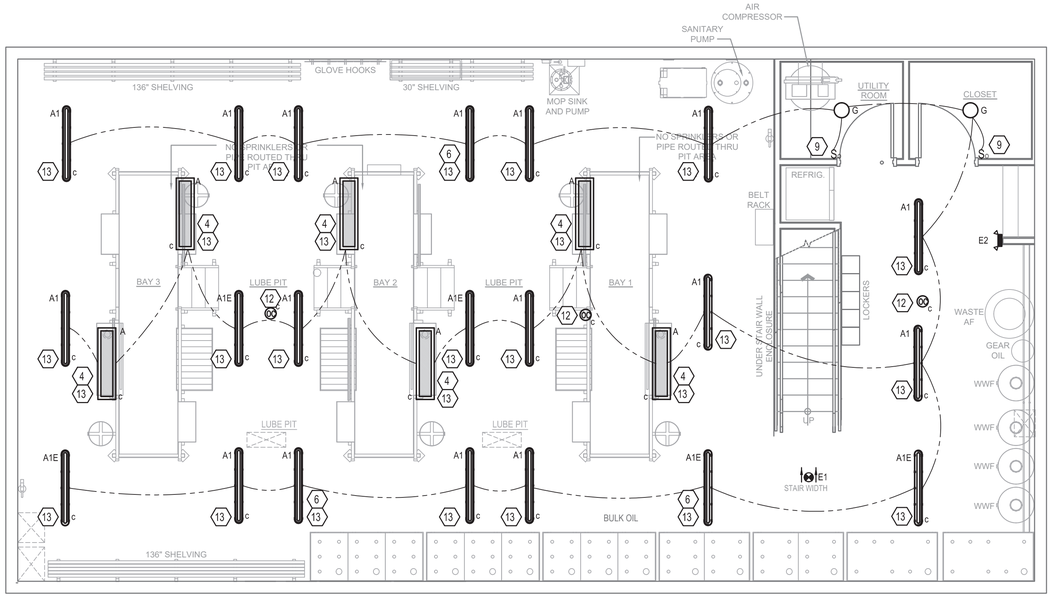

INTERIOR LIGHTS CIRCUIT: L1-3

1 / E-1.0 LOWER LEVEL LIGHTING PLAN

Scale: 1/4" = 1'-0"

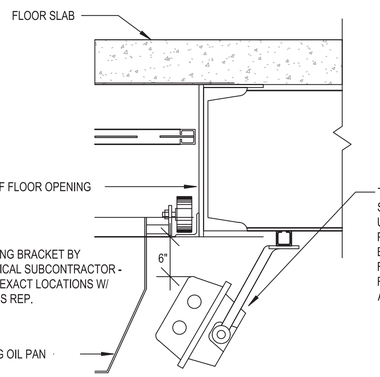

3 / E-1.0 'A' FIXTURE MOUNTING DETAIL

Scale: NOT TO SCALE

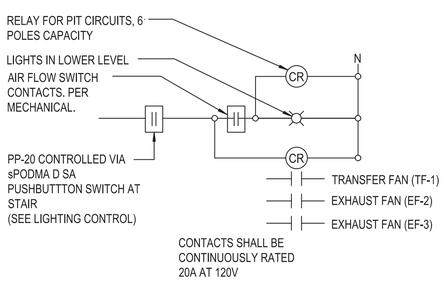

SEQUENCE OF OPERATIONS:

MANUAL SWITCH AT STAIR TO CONTROL PIT LIGHTING. OCCUPANCY SENSORS DOWNSTREAM OF SWITCH SHALL CONTROL LIGHTING. ROUTE PIT LIGHTING CIRCUIT THROUGH AIR FLOW SWITCH CONTACTS AND RELAYS. EXHAUST FAN(S) (EF-2, EF-3) AND TRANSFER FAN (TF-1) CONTACTORS SHALL BE CONNECTED TO AIR FLOW SWITCH CONTACT. IN THE EVENT THAT EITHER FAN STOPS OPERATING, THE RESPECTIVE FAN CONTACT SHALL SEND A SIGNAL TO THE AIR FLOW SWITCH CONTACT TO CUT POWER TO THE PIT LIGHTING CIRCUIT. THIS IS TO NOTIFY OCCUPANTS THAT AIR FLOW HAS STOPPED AND THEY ARE TO EXIT THE PIT AREA.

4 / E-1.0 LUBE PIT LIGHT SWITCH DETAIL

Scale: NOT TO SCALE

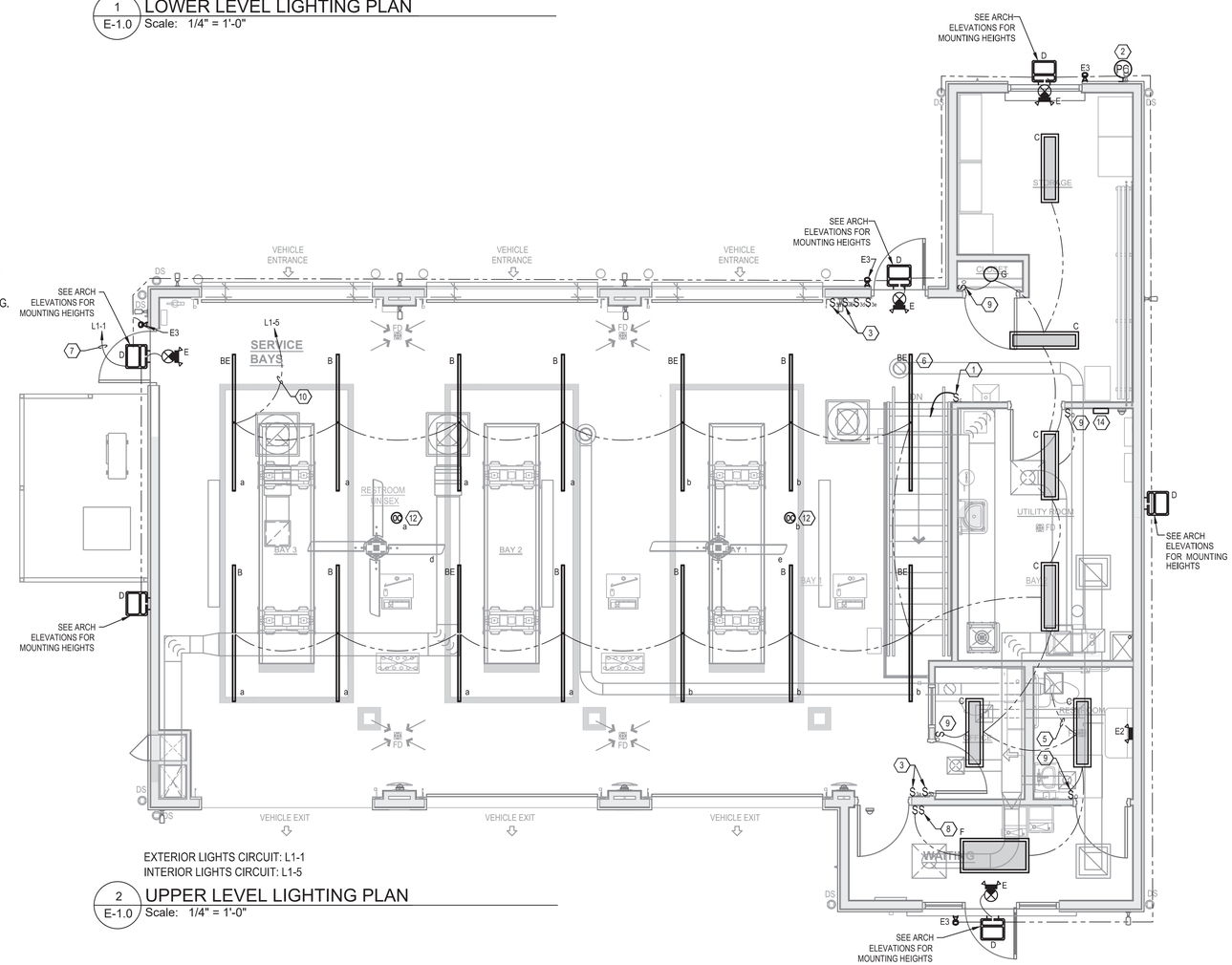

EXTERIOR LIGHTS CIRCUIT: L1-1

INTERIOR LIGHTS CIRCUIT: L1-5

2 / E-1.0 UPPER LEVEL LIGHTING PLAN

Scale: 1/4" = 1'-0"

GENERAL NOTES:

A. CIRCUIT EM AND EXIT SIGNS TO NEAREST LIGHTING CIRCUIT. CONNECT AHEAD OF SWITCHING IN COMPLIANCE WITH NEC 700.12 (F).

B. MANUFACTURER OF SUBMITTED/APPROVED CEILING AND WALL MOUNTED OCCUPANCY SENSORS TO VERIFY PLACEMENT FOR PROPER COVERAGE AND FUNCTIONALITY OF DEVICES.

C. LOCATE WALL SWITCHES SUCH THAT EDGE OF COVERPLATE IS 4" MAX FROM ADJACENT DOOR JAMB.

D. COORDINATE CEILING MOUNTED DEVICES AND ELECTRICAL CONDUIT ROUTING WITH PROCESS PIPING INSTALLER PRIOR TO ROUGH-IN. NO CONDUITS TO BE ABOVE OIL TANKS.

E. COORDINATE FIXTURE MOUNTING WITH STRUCTURAL FRAMING PRIOR TO ORDERING.

LIGHTING KEY NOTES

1. CONNECT LOW VOLTAGE PUSHBUTTON WALLPOD TO LOWER LEVEL TYPE 'A' FIXTURES AND CONTACTOR CONTROLLING EF-2 AND TF-1. PROVIDE ACUITY BRANDS #sPODMA-D-SA. REFER TO DETAIL 4 ON THIS SHEET FOR ADDITIONAL INFORMATION.
2. PHOTOCELL. MOUNT HIGH ON WALL FACING NORTH.
3. LOW VOLTAGE PUSHBUTTON WALLPOD. PROVIDE ACUITY BRANDS #sPODMA-D-SA. REFER TO LIGHTING CONTROL DETAIL.
4. REFER TO DETAIL FOR MOUNTING INFORMATION.
5. CONNECT TO EXHAUST FAN, SWITCH W/LIGHTS.
6. NIGHT LIGHT, FIXTURE TO REMAIN UNSWITCHED.
7. WIRE VIA LIGHTING CONTROLS SYSTEM.
8. PROVIDE SWITCH TO CONTROL RECEPTACLES MOUNTED AT CEILING. FOR OWNER SIGNAGE.
9. OCCUPANCY SENSOR, EQUAL TO SENSOR SWITCH #WSX, PASSIVE INFRARED (PIR) SENSOR (LINE VOLTAGE), WALL MOUNTED, VERIFY COLOR W/ OWNER.
10. CIRCUIT TO BE CONTROLLED VIA DEDICATED DAYLIGHT PHOTOCONTROL SENSORS.
11. NOT USED.
12. LOW VOLTAGE CEILING MOUNTED OCCUPANCY SENSOR WITH MANUAL DIMMING. UPPER LEVEL SENSORS TO INCLUDE DAYLIGHT SENSING CONTROL AND AUTO DIMMING. PROVIDE ACUITY BRANDS#CM-PDT-10 FOR LOWER LEVEL AND #CM-PDT-9-ADC FOR UPPER LEVEL. PROVIDE FULLY OPERATIONAL SYSTEM & TRAINING AS REQUIRED. REFER TO LIGHTING CONTROL DETAILS.
13. COORDINATE LIGHT FIXTURE LAYOUT WITH PRODUCT PROCESS & PLUMBING PIPING. PIPING/PRODUCT LINES TAKE PRECEDENCE OVER LIGHT LOCATIONS WHERE NECESSARY. COORDINATE IN FIELD, W/OWNER'S REP.
14. PROVIDE LIGHTING CONTROL PANEL.

BRAMIC DESIGN GROUP PLLC
8003 S. GALILEO LN.
TUCSON, AZ 85747
PHONE: (520) 401-9183

COPYRIGHT NOTICE
This drawing is the property of the above referenced Professional and is not to be used for any purpose other than the specific project and site names herein, and cannot be reproduced in any manner without the express written permission from the Professional.

DATE	ISSUE
05.17.24	ISSUED FOR PERMIT REVIEW SET

DATE	REVISION

PROFESSIONAL SEAL

Registered Professional Engineer (Civil) CERTIFICATE NO. 32749 SARAH JEWETT LESKA Date Signed 09/30/22 ARIZONA, U.S.A. EXPIRES 09/30/2023

PROFESSIONAL IN CHARGE
SLL

PROJECT MANAGER
SLL/KY

QUALITY CONTROL
SLL/KY

DRAWN BY
KY/RW/RJJ

PROJECT ADDRESS
2920 S. PARK AVE
TUCSON ARIZONA 85713

VALVOLINE INSTANT OIL CHANGE

BDG PROJECT NUMBER
23-849

SHEET NAME
LIGHTING PLANS AND DETAILS

SHEET #
E-1.0

7536 N. La Cholla Blvd.
Tucson, Arizona 85741
Phone (520) 622-2196
Fax (520) 622-2198
www.eda-az.com
Project #: 23110
EDA

THESE DOCUMENTS ARE INSTRUMENTS OF SERVICE AND PROTECTED BY COPYRIGHT. THESE DOCUMENTS ARE NOT TO BE REPRODUCED OR UTILIZED FOR ANY PURPOSE OTHER THAN ORIGINALLY INTENDED WITHOUT THE EXPRESS WRITTEN BY ELECTRICAL DESIGN ASSOCIATES, INC.

Hardi-Brick OPTION

OUTDOOR LIGHTING CODE COMPLIANCE

(2012 PIMA COUNTY)

Project is located in Lighting Area	E3	
Total Site Area	0.71	DEVELOPED ACRES
(OPTION #3)		

	ALLOWABLE LUMENS /ACRE	ALLOWABLE LUMENS THIS SITE
Total =	200,000	142,792
Total Unshielded =	12,000	8,567

Actual Installed Lumens:

FIXTURE TYPE	QTY	LUMENS	FCO	FULLY SHIELDED	FCO LUMENS	UNSHIELDED LUMENS	CONTRIBUTION %AGE	TOTAL LUMENS	EXEMPTION
ELAS	5	6,459	X	X	32,295	-	100%	32295	
D	6	4,066	X	X	24,396	-	100%	24396	
E3 (DEDICATED EM)	4	220			-	880		880	
Totals					56,691	880		57,571	

142,792	LUMENS ALLOWED ON SITE
57,571	LUMENS USED
85,221	Unused Lumens
8,567	UNSHIELDED LUMENS ALLOWED ON SITE
880	UNSHIELDED LUMENS USED
7,687	Unused Unshielded Lumens

SPECIAL INSPECTION:

80,636	TOTAL LUMENS /ACRE USED
40%	OF THE ALLOWABLE LUMENS USED
LESS THAN 100,000 LUMENS PER ACRE	YES
LESS THAN 75% OF ALLOWABLE LUMENS	YES
RECREATIONAL, SALES, OR OUTDOOR MANUFACTURING	NO
SPECIAL INSPECTION REQUIRED	NO

ABBREVIATIONS:

FCO	FULL CUT OFF
FCO UC	FULL CUTOFF; FULLY SHIELDED, UNDER CANOPY
REC LTG	RECREATIONAL LIGHTING
SALES LTG	SALES OR OUTDOOR RETAIL LIGHTING

COMcheck Software Version 4.1.5.1

Interior Lighting Compliance Certificate

Project Information

Energy Code: 2018 IECC
Project Title:
Project Type: New Construction

Construction Site: Owner/Agent: Designer/Contractor:

Additional Efficiency Package(s)

Unspecified

Allowed Interior Lighting Power

A Area Category	B Floor Area (ft2)	C Allowed Watts / ft2	D Allowed Watts (B X C)
1-Automotive Facility	3800	0.71	2698
		Total Allowed Watts =	2698

Proposed Interior Lighting Power

A Fixture ID : Description / Lamp / Wattage Per Lamp / Ballast	B Lamps/ Fixture	C # of Fixtures	D Fixture Watt.	E (C X D)
1-Automotive Facility				
LED 1: A: Other:	1	6	51	306
LED 2: A1: Other:	1	16	49	784
LED 3: A1E: Other:	1	5	49	245
LED 4: B: Other:	1	10	68	680
LED 5: BE: Other:	1	4	68	272
LED 6: C: Other:	1	6	33	198
LED 7: F: Other:	1	1	57	57
LED 8: G: Other:	1	3	13	39
		Total Proposed Watts =		2581

Interior Lighting PASSES: Design 4% better than code

LIGHT FIXTURE SCHEDULE

MARK	MANUFACTURER'S CATALOG #	MOUNT	LED LAMPING	LUMENS	CRI	COLOR TEMP	VOLTAGE	SIZE	COLOR OR FINISH	DIMMING	LENS & DISTRIBUTION	FULL CUT OFF	WL LISTED	OPTIONS & REMARKS
INTERIOR														
A	LITHONIA #FEM	SURFACE	51W	8000	80	4000K	MVOLT	11"x18" x51"	WHITE	10% 0-10V	FROSTED ACRYLIC		YES	PROVIDE (2) SURFACE MOUNT BRACKETS; STAINLESS STEEL LATCHES
A1	LITHONIA #CSVT	SURFACE	49W	6000	80	4000K	MVOLT	3"x4" x49"	WHITE	10% 0-10V	FROSTED ACRYLIC		YES	STAINLESS STEEL LATCHES
A1E	SAME AS A1 EXCEPT AS NOTED													7W CA TITLE 20 COMPLIANT BATTERY; STAINELSS STEEL LATCHES
B	LITHONIA #TZL1N	SURFACE	68W	10000	80	4000K	MVOLT	3"x11" x96"	WHITE	10% 0-10V	FROSTED DIFFUSE			
BE	SAME AS B EXCEPT AS NOTED													10W CA TITLE 20 COMPLIANT BATTERY EMERGENCY BATTERY
C	LITHONIA #LBL4	SURFACE	33W	4000	80	4000K	MVOLT	3"x10" x49"	WHITE	10% 0-10V	PRISMATIC			
E	LITHONIA #LHQM	WALL	2x1.5W RED				MVOLT	20"x8" 5"	WHITE					WITH HIGH OUTPUT NICAD BATTERY PACK & REMOTE HEAD CAPABILITY
E1	LITHONIA #LQM	SURFACE	1W RED				MVOLT	12"x2" x8"	WHITE					WITH NICAD BATTERY PACK
E2	LITHONIA #ELM2L	WALL	3W	220			MVOLT	10"x4" x5"	WHITE					WITH BATTERY PACK
E3	LITHONIA #ELA Q	WALL	2W	220			MVOLT	10"x4" x8"	BLACK					
F	LITHONIA #CXP	SURFACE	57W	7200	80	4000K	MVOLT	24"x4"	WHITE	10% 0-10V	SATIN WHITE			SURFACE MOUNT KIT
G	NUVO #62-1680	SURFACE	13W	1000	90	4000K	120V	8"Ø x2"	WHITE					INTEGRAL OCC SENSOR
EXTERIOR														
D	LITHONIA #DSXW1	WALL +13'0"	35W	4066	70	3000K	MVOLT	14"x4" x7"	DARK BRONZE		FORWARD THROW MED	YES	YES	
EALS	LITHONIA #RSX1	23' POLE 2' BASE	51W	6459	70	3000K	MVOLT	22"x13" x3"	DARK BRONZE		TYPE III WIDE	YES	YES	

NOTES:

1. EQUALS IN QUALITY, PERFORMANCE, AND AESTHETICS BY ACUITY, COOPER/EATON, HUBBELL, AND PHILIPS ARE ACCEPTABLE.
2. PROVIDE INTEGRAL EMERGENCY BATTERY BACKUP WITH 1000 LUMENS FOR FIXTURES SHOWN AS EMERGENCY. PROVIDE FOR ALL FIXTURES NOTED AS "EM" OR FOR ALL 1/2 SHADED FIXTURES.
3. STANDARD MANUFACTURERS 5 YEAR WARRANTY, UNO.
4. LIGHT FIXTURE NAMEPLATE WATTAGE SHALL NOT EXCEED LED LAMP WATTAGES INDICATED.
5. VERIFY DIMMER COMPATIBILITY PER LIGHT FIXTURE TYPE MARKING PRIOR TO ORDERING.
6. FIXTURE MOUNTING HEIGHT SHOWN IS TO BOTTOM OF FIXTURE, UNO.
7. SMOOTH CONCRETE POLE BASE (FORM SEAMS SHALL NOT SHOW).

NOTES: LIGHTING CONTACTOR CONTROL DIAGRAMS

A. AUTOMATIC CONTROL, INCLUDE EXTERIOR BUILDING SIGNS AND EXTERIOR LOT LIGHTS.

B. TIME SWITCH: TO BE INTERMATIC ET2145C SERIES, ELECTRONIC, 120V, 7 DAY PROGRAMMABLE.

C. LIGHTING CONTACTORS: TO BE ELECTRICALLY HELD TYPE, 120V COIL CONTROL, WITH NEMA 1 ENCLOSURE, SILVER ALLOY DOUBLE BREAK 250 VOLT RATED CONTACTS, HEAVY-DUTY AND U.L. LISTED.

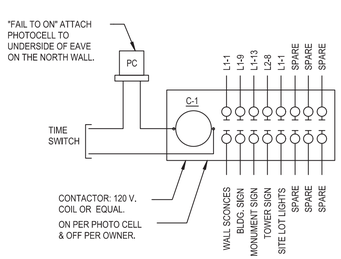

3 E-1.1 EXTERIOR LIGHTING CONTROL DIAGRAM
Scale: NOT TO SCALE

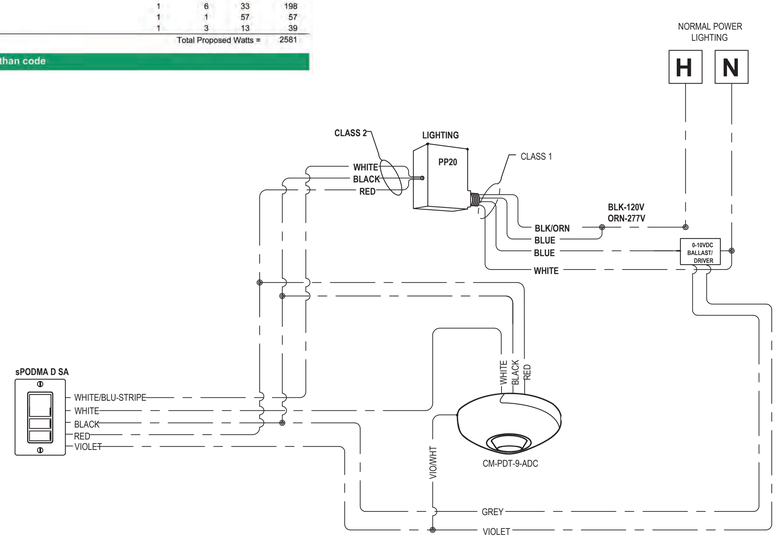

2 E-1.1 LIGHTING CONTROL DIAGRAM-UPPER LEVEL
Scale: NOT TO SCALE

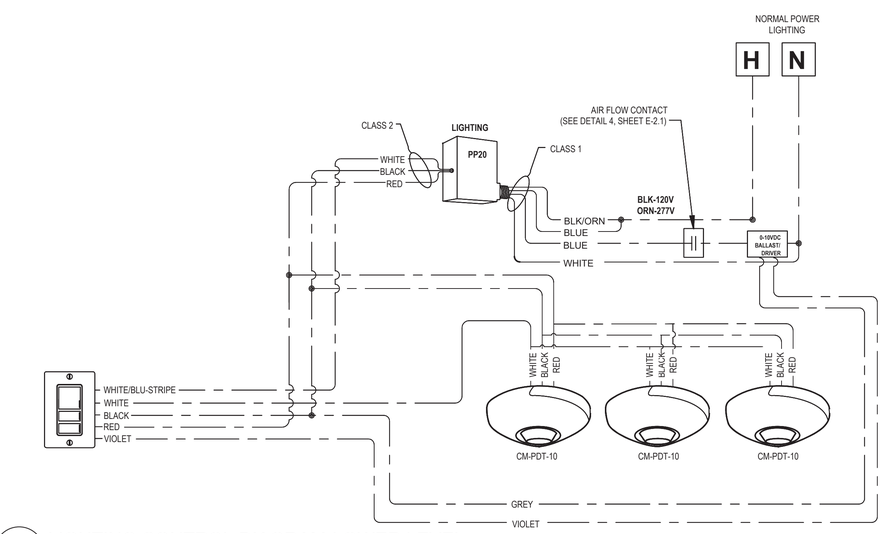

1 E-1.1 LIGHTING CONTROL DIAGRAM-LOWER LEVEL
Scale: NOT TO SCALE

7536 N. La Cholla Blvd.
Tucson, Arizona 85741
Phone (520) 622-2196
Fax (520) 622-2198
www.eda-az.com
Project #: 23110
EDA

THESE DOCUMENTS ARE INSTRUMENTS OF SERVICE AND PROTECTED BY COPYRIGHT. THESE DOCUMENTS ARE NOT TO BE REPRODUCED OR UTILIZED FOR ANY PURPOSE OTHER THAN ORIGINALLY INTENDED UNLESS AUTHORIZED, IN WRITING BY ENVIRONMENTAL DESIGN ASSOCIATES, INC.

Hardi-Brick OPTION

BRAMIC DESIGN GROUP PLLC
8003 S. GALILEO LN.
TUCSON, AZ 85747
PHONE: (520) 401-9183

COPYRIGHT NOTICE
This drawing is the property of the above referenced Professional and is not to be used for any purpose other than the specific project and site names herein, and cannot be reproduced in any manner without the express written permission from the Professional.

DATE	ISSUE
05.17.24	ISSUED FOR PERMIT REVIEW SET

DATE	REVISION

PROFESSIONAL SEAL

Registered Professional Engineer (Civil) CERTIFICATE NO. 32749 SARAH JEWETT LESKA Date Signed 05/17/2024 ARIZONA, U.S.A. EXPIRES 09/30/2025

PROFESSIONAL IN CHARGE
SLL

PROJECT MANAGER
SLL/KY

QUALITY CONTROL
SLL/KY

DRAWN BY
KY/RW/RJJ

PROJECT ADDRESS
2920 S. PARK AVE
TUCSON ARIZONA 85713

Valvoline Instant Oil Change

VALVOLINE INSTANT OIL CHANGE

BDG PROJECT NUMBER
23-849

SHEET NAME
LIGHT FIXTURE SCHEDULE, CALCS AND DIAGRAMS

SHEET #
E-1.1

TYPE
A

LITHONIA LIGHTING®

FEATURES & SPECIFICATIONS

INTENDED USE — A general purpose and energy-efficient surface-mounted or suspended LED fixture, suitable for wet, damp and/or cold locations. For vapor-tight demanding environments where moisture or dust is a concern and where relatively low fixture mounting heights and wide fixture spacing are common. Not for use or installation in direct outdoor sunlight. Must be installed under canopy or covered ceiling. For direct sunlight installations, please refer to the FEX product family. Typical applications include industrial facilities, parking garages, retail malls, multi-purpose rooms, garden centers, and food processing. **Certain airborne contaminants can diminish the integrity of acrylic and/or polycarbonate. Click here for Acrylic-Polycarbonate Compatibility table for suitable use.**

Certain airborne contaminants may adversely affect the functioning of LEDs and other electronic components, depending on various factors such as concentrations of the contaminants, ventilation, and temperature at the end-user location. Click here for a list of substances that may not be suitable for interaction with LEDs and other electronic components.

CONSTRUCTION — One-piece 5VA fiberglass housing with integral perimeter channel utilizing continuous poured-in-place NEMA 4X gasket. Approved for through wiring. Captive polymeric latches are standard. Stainless steel latches (#316) available as an option for food processing or more demanding applications.

Power connection is easily accomplished through pre-drilled holes.

OPTICS — Injection molded, acrylic lens (.080" thick) provides high impact-resistance comparable to 100% DR. A UV stabilized polycarbonate diffuser is available (.080" thick) in clear or frosted for additional impact strength where vandal protection is desired.

Expected service life of 60,000 hours at 80% lumen maintenance (L80); predicted life of more than 100,000 hours.

ELECTRICAL — Utilizes high-efficiency LEDs mounted to core circuit boards. High-efficiency drivers operate 120-277 (MVOLT) and 347-480 (HVOLT) offered with 0-10 volt dimming, dims to 10%. Standard Luminaire Surge Protection Level: 6kV/3kA Surge Rated per ANSI C82.77-5-2015.

INSTALLATION — A pair of stainless steel surface mount brackets (SMB) are included (unless another mounting option is chosen) allowing for surface (ceiling) or suspension mount applications using included bail with aircraft cable or chain. Optional pair of dual pendant mount brackets (DPMB) are available for surface (ceiling) or suspension mount applications using either 3/8" threaded rod or included bail with aircraft cable or chain. Optional pair of angle mounting brackets (ANGBKT) for horizontal wall mount applications.

LISTINGS — CSA Certified to UL and C-UL Standards. Suitable for wet location. IP65, IP66, IP67 rated. NSF Splash Zone 2 and Non-Food Zone rated. NEMA 4X rated. Sensors maintain IP65 and IP66 only. See chart on page 5 for Ambient Temperatures.

DesignLights Consortium® (DLC) Premium qualified product and DLC qualified product. Not all versions of this product may be DLC Premium qualified or DLC qualified. Please check the DLC Qualified Products List at www.designlights.org/QPL to confirm which versions are qualified.

BUY AMERICAN ACT — Product with the BAA option is assembled in the USA and meets the Buy America(n) government procurement requirements under FAR, DFARS and DOT regulations.
Please refer to www.acuitybrands.com/buy-american for additional information.

WARRANTY — 5-year limited warranty. This is the only warranty provided and no other statements in this specification sheet create any warranty of any kind. All other express and implied warranties are disclaimed. Complete warranty terms located at: www.acuitybrands.com/support/warranty/terms-and-conditions

NOTE: Actual performance may differ as a result of end-user environment and application.
All values are design or typical values, measured under laboratory conditions at 25 °C.
Specifications subject to change without notice.

Low-Profile Enclosed and Gasketed Industrial

FEM LED

SURFACE/ SUSPENDED/WALL MOUNT

BAA

Stock configurations are offered for shorter lead times:

Standard Part Number	Stock Part Number
FEM L48 4000LM LPAFL MD MVOLT GZ10 40K 80CRI	FEM L48 4L MVOLT
FEM L48 4000LM LPAFL MD MVOLT GZ10 50K 80CRI	FEM L48 4L MVOLT 5K

design select

Items marked by a shaded background qualify for the Design Select program and ship in 15 days or less. To learn more about Design Select, visit www.acuitybrands.com/designselect.
*See ordering tree for details

A+ Capable Luminaire

This item is an A+ capable luminaire, which has been designed and tested to provide consistent color appearance and out-of-the-box control compatibility with simple commissioning.

- All configurations of this luminaire meet the Acuity Brands' specification for chromatic consistency
- This luminaire is part of an A+ Certified solution for nLight® control networks marked by a shaded background*

To learn more about A+, visit www.acuitybrands.com/aplus.

*See ordering tree for details

TYPE
A1& A1E

LITHONIA LIGHTING®

FEATURES & SPECIFICATIONS

INTENDED USE — Ideal for damp/wet locations such as outdoor venues, canopies and locker rooms. Not for use or installation in direct outdoor sunlight. Must be installed under canopy or covered ceiling. For direct sunlight installations, please refer to the FEX product family. **Certain airborne contaminants can diminish integrity of acrylic and/or polycarbonate. Click here for Acrylic-Polycarbonate Compatibility table for suitable uses.**

Certain airborne contaminants may adversely affect the functioning of LEDs and other electronic components, depending on various factors such as concentrations of the contaminants, ventilation, and temperature at the end-user location. Click here for a list of substances that may not be suitable for interaction with LEDs and other electronic components.

CONSTRUCTION

- Light Gray Polycarbonate housing
- Frosted Polycarbonate lens
- Poured in place polyurethane gasket
- Polycarbonate Latches, optional stainless steel latches available.
- Standard 1/2" wet location fitting

ELECTRICAL

- High Efficiency LEDs meet DLC Standard
- MVOLT (120-277V) & 347V
- 0-10V Dimming standard

Luminaire Surge Protection Level: Designed to withstand up to 2.5kV/0.75kA per ANSI C82.77-5-2015. For applications requiring higher level of protection additional surge protection must be provided.

INSTALLATION

- Surface (wall, ceiling) using standard brackets (301 stainless steel) includes bail for chain hanging
- Suspended (chain, cable) using standard brackets (301 stainless steel)

LISTINGS

- CSA Certified to UL & C-UL Standards for wet location
- IP65, IP66 rated per IEC60529
- NSF Splash zone rated
- FCC Title 47, Part 15 Subpart B compliant
- 2.5kV/0.75kA Surge Rated per ANSI C82-77-5-2015
- CSA Ambient Listings on Page 3
- Lumen Maintenance Listed on Page 3

DesignLights Consortium® (DLC) qualified product. Not all versions of this product may be DLC qualified. Please check the DLC Qualified Products List at www.designlights.org/QPL to confirm which versions are qualified.

WARRANTY — 5-year limited warranty. This is the only warranty provided and no other statements in this specification sheet create any warranty of any kind. All other express and implied warranties are disclaimed. Complete warranty terms located at: www.acuitybrands.com/support/warranty/terms-and-conditions

Note: Actual performance may differ as a result of end-user environment and application.
All values are design or typical values, measured under laboratory conditions at 25 °C.
Specifications subject to change without notice.

Vapor Tight LED Strip Light

CSVT

NOM

A+ Capable Luminaire

This item is an A+ capable luminaire, which has been designed and tested to provide consistent color appearance and out-of-the-box control compatibility with simple commissioning.

- All configurations of this luminaire meet the Acuity Brands' specification for chromatic consistency
- This luminaire is part of an A+ Certified solution for nLight® or XPoint™ Wireless control networks marked by a shaded background*

To learn more about A+, visit www.acuitybrands.com/aplus.
*See ordering tree for details

TYPE
B & BE

LITHONIA LIGHTING®

FEATURES & SPECIFICATIONS

INTENDED USE — Built on the compact, low-profile Z strip channel, this LED strip offers long maintenance-free life, several color temperatures, lumen outputs and lengths. Ideal for new construction and retrofit applications in T5 and T8 lengths. Ideal for uplight and downlight in commercial, retail, manufacturing, warehouse, cove and display applications. **Certain airborne contaminants can diminish the integrity of acrylic and/or polycarbonate. Click here for Acrylic-Polycarbonate Compatibility table for suitable uses.**

CONSTRUCTION — Compact-design channel and cover are formed from code-gauge cold-rolled steel. Easy to install row aligner included for continuous row mounting.

Finish: Paint options include high-gloss, baked white enamel (WH), galvanized (GALV), matte black (MB) and smoke gray (SKGY). After fabrication, five-stage iron phosphate pre-treatment ensures superior paint adhesion and rust resistance.

OPTICS — Standard diffuse snap on/snap off lens eliminates pixels, improves uniformity and minimizes glare. L/LENS option available.

ELECTRICAL — L70>60,000hours. Utilizes high-output LEDs integrated on a two-layer circuit board, ensuring cool-running operation. Optional internal pluggable wiring harness for reduced labor cost in row mounting applications. (See PLR_ ordering information on page 2.) Electronic LED driver is rated for 75 input watts maximum (see Operational Data on page 4 for actual wattage consumption), **multi-volt input and 0-10V dimming standard**. This fixture is designed to withstand a maximum line surge of 2.5kV at 0.75kA combination wave for indoor locations, for applications requiring higher level of protection additional surge protection must be provided.

LEDs provide nominal 80 CRI at 3000 K, 3500 K, 4000 K, or 5000 K.

Lumen output up to 2,000 lumens per foot. In 86°F (30°C) ambient environments. Luminaire should be installed in applications where ambient temperatures do not exceed 86°F (30°C).

INSTALLATION — Tool-less channel cover for easy installation.

Fixture may be surface mounted (with or without ZSPRG hanger), pendant or stem mounted with appropriate mounting options. Three-point aligner locks in place for easy continuous row mounting.

LISTINGS — CSA certified to US and Canadian safety standards. For use in damp locations between -40°F (-40°C) and 86°F (30°C).

DesignLights Consortium® (DLC) qualified product. Not all versions of this product may be DLC qualified. Please check the DLC Qualified Products List at www.designlights.org/QPL to confirm which versions are qualified.

BUY AMERICAN — Product with the BAA option is assembled in the USA and meets the Buy America(n) government procurement requirements under FAR, DFARS and DOT.
Please refer to www.acuitybrands.com/buy-american for additional information.

WARRANTY — 5-year limited warranty. This is the only warranty provided and no other statements in this specification sheet create any warranty of any kind. All other express and implied warranties are disclaimed. Complete warranty terms located at:
www.acuitybrands.com/support/warranty/terms-and-conditions

Note: Actual performance may differ as a result of end-user environment and application.

All values are design or typical values, measured under laboratory conditions at 25 °C.

Specifications subject to change without notice.

LED Striplight

ZL1N

24", 48" and 96" Lengths

Buy American

A+ Capable Luminaire

This item is an A+ capable luminaire, which has been designed and tested to provide consistent color appearance and out-of-the-box control compatibility with simple commissioning.

- All configurations of this luminaire meet the Acuity Brands' specification for chromatic consistency
- This luminaire is part of an A+ Certified solution for nLight® control networks marked by a shaded background*

To learn more about A+, visit www.acuitybrands.com/aplus.

*See ordering tree for details

TYPE
C

LITHONIA LIGHTING®

FEATURES & SPECIFICATIONS

INTENDED USE — LBL LED wraparound provides a digital lighting platform to deliver general ambient lighting for surface-mount applications. The LED system delivers long life and excellent color to ensure a quality, low-maintenance lighting installation. Ideal for closets, storage rooms, hallways, stairwells and offices.

CONSTRUCTION — Metal parts are die formed from pre-painted code-gauge steel. Prismatic diffuser is 100% acrylic with sonically welded luminous ends. Continuous side flanges on fixture body provide light trap and continuous diffuser support to prevent accidental opening and simplify maintenance.

OPTICS — Curved prismatic diffuser with linear side prisms and highly transmissive overlay minimizes lamp image and provides high-angle brightness control. Luminous end plates soften appearance for improved aesthetics.

ELECTRICAL — Long-life LEDs, coupled with high-efficiency drivers, provide superior quantity and quality of illumination for extended service life. 90% LED lumen maintenance at 50,000 hours (L90/50,000). The LEDs have a CRI of 82.

eldoLED driver options deliver choice of dimming range and choices for control, while assuring flicker-free, low-current inrush, 89% efficiency and low EMI.

Step-level dimming option allows system to be switched to 50% power for compliance with common energy codes while maintaining fixture appearance.

CONTROLS — Pair the LBL with the fixture mount Sensor Switch LSXR sensor for additional energy savings when the space is unoccupied. The LSXRHL sensor dims the fixture down to a low-level setting when there is no occupancy. This option is ideal for stairwells, back rooms, and closets due to the low occupancy level in those spaces.

Optional nLight® embedded controls continuously monitor system performance, allow for constant lumen management / compensation function, facilitate simple "plug-and-play" network and controls upgrading via Cat-5 cable. Ballast disconnect provided where required to comply with US and Canadian codes.

LISTINGS — CSA certified to meet U.S. and Canadian standards. Damp listed.

DesignLights Consortium® (DLC) Premium qualified product and DLC qualified product. Not all versions of this product may be DLC Premium qualified or DLC qualified. Please check the DLC Qualified Products List at www.designlights.org/QPL to confirm which versions are qualified.

BUY AMERICAN ACT — Product with the BAA option is assembled in the USA and meets the Buy America(n) government procurement requirements under FAR, DFARS and DOT regulations. Please refer to www.acuitybrands.com/buy-american for additional information.

WARRANTY — 5-year limited warranty. This is the only warranty provided and no other statements in this specification sheet create any warranty of any kind. All other express and implied warranties are disclaimed. Complete warranty terms located at: www.acuitybrands.com/support/warranty/terms-and-conditions

Note: Actual performance may differ as a result of end-user environment and application.
All values are design or typical values, measured under laboratory conditions at 25 °C.
Specifications subject to change without notice.

Low-Profile Curved-Basket
LED Wraparound

LBL4

4' LENGTH, NARROW HOUSING
LED

BAA

eldoLED

A+ Capable Luminaire

This item is an A+ capable luminaire, which has been designed and tested to provide consistent color appearance and out-of-the-box control compatibility with simple commissioning.

- All configurations of this luminaire meet the Acuity Brands' specification for chromatic consistency
- This luminaire is part of an A+ Certified solution for nLight® control networks when ordered with drivers marked by a shaded background*
- This luminaire is part of an A+ Certified solution for nLight control networks, providing advanced control functionality at the luminaire level, when selection includes driver and control options marked by a shaded background*

To learn more about A+, visit www.acuitybrands.com/aplus.

*See ordering tree for details

TYPE
E

LITHONIA LIGHTING®

FEATURES & SPECIFICATIONS

INTENDED USE — Suitable for applications requiring both exit sign and unit equipment. Attractive, 8" tall, streamlined design is great for above-the-door applications and other tight fits. Optional high-output version with remote lamps are ideal for emergency egress lighting. **Certain airborne contaminants can diminish integrity of acrylic and/or polycarbonate. Click here for Acrylic- Polycarbonate Compatibility table for suitable uses.**

CONSTRUCTION — Engineering-grade thermoplastic housing is impact-resistant, scratch-resistant and corrosion-proof. UL94V-0 flame rating. UV-stable resin resists discoloration from natural and man-made light sources.

Rugged unibody housing snaps together with no additional fasteners. Faceplate and back cover are interchangeable on housing. Positive snap-fit tabs hold faceplate securely, yet are easily removable for lamp compartment access. Universal, directional chevron inserts are easily removed and reinserted.

Uniform graphics illumination without shadows or hot spots. Letters are 6" high with 3/4" stroke, with 100 ft. viewing distance rating based upon UL924 standard.

LEDs mounted on primary circuit boards for sign illumination. Low-energy LED lamp in sign operates in normal (AC input) and emergency (DC input) modes.

Low-profile, integrated test switch/pilot light. Easily viewed bright red status indicator.

Unique track-and-swivel arrangement permits full range of direction of lamp head adjustment. Universal J-box mounting pattern. Tool-less access for maintenance. Conduit entry position on top of unit.

U.S. Patent No. 6,848,798; 6,499,866; 6,142,648; 5,797,673; D379,373; 5,526,251; D484,272; D473,672; 5,611,163; 5,646,502.

OPTICS — Twin LED lamp heads operate in emergency (DC input) mode with 12 series-parallel white LEDs in each head. Provides redundant light sources to ensure emergency lighting performance. The typical life of the exit LED lamp is 5 years, based on 24/7 operation.

ELECTRICAL — Dual-voltage input capability (120/277V). Edge connector on printed circuit board ensures long-term durability.

Current-limiting charger maximizes battery life and minimizes energy consumption. Provides low operating costs.

Short-circuit protection — current-limiting charger circuitry protects printed circuit board from shorts.

Thermal compensation adjusts charger output to provide optimum charge voltage relative to ambient temperature.

Regulated charge voltage maintains constant-charge voltage over a wide range of line voltages. Prevents over/undercharging that shortens battery life and reduces capacity.

Filtered charger input minimizes charge voltage ripple and extends battery life.

AC/LVD reset allows battery connection before AC power is applied and prevents battery damage from deep discharge.

Single multi-color LED indicator to display two-state charging, test activation and three-state diagnostic test. Test switch provides manual activation of 30-second diagnostic testing for on-demand visual inspection. Self-diagnostic testing for 30 seconds every 30 days, 30 minutes at 180-day interval, and 90 minutes annually. Diagnostic evaluation of LED light source, AC-to-DC transfer, charging and battery condition.

Battery: Sealed, maintenance-free nickel-cadmium battery delivers 90-minute capacity to emergency lamps. Two-state contstant-current charge maximizes battery life and automatically recharges after battery discharge. Low-voltage disconnect prevents excessively deep discharge that can permanently damage the battery. Optional high-output battery to power both local and optional LED remote lamp heads simultaneously.

INSTALLATION — Universal mounting canopy for top or end mount. Back mount standard for single face only. Housing snaps to canopy with positive-locking tabs. Cam locking pin secures housing to canopy.

Easily removed mounting knockouts. Conduit entry knockout for 1/2" flexible conduit. J-box pattern on back panel.

LISTINGS — UL damp location listed standard 50°-104°F (10°-40°C). Meets UL 924, NFPA 101 (current Life Safety Code), NEC and OSHA illumination standards. Meets all applicable FCC Title 47, Part 15, Subpart B requirements.

QUANTUM®
Thermoplastic Exits

LHQM LED

LED Lamp Head
Nickel-Cadmium Battery

BAA

BUY AMERICAN ACT — Product with the BAA option is assembled in the USA and meets the Buy America(n) government procurement requirements under FAR, DFARS and DOT regulations.
Please refer to www.acuitybrands.com/buy-american for additional information.

WARRANTY — 5-year limited warranty. (Battery is prorated). This is the only warranty provided and no other statements in this specification sheet create any warranty of any kind. All other express and implied warranties are disclaimed. Complete warranty terms located at: www.acuitybrands.com/support/warranty/terms-and-conditions

Note: Actual performance may differ as a result of end-user environment and application.
All values are design or typical values, measured under laboratory conditions at 25 °C.
Specifications subject to change without notice.

† Exit Signs Certified in the CA Title 20 Appliance Efficiency Database.

CS Looking for Contractor Select readily available configurations? Click here to visit Contractor Select™ spec sheet or go to www.contractorselect.com

ORDERING INFORMATION Lead times will vary depending on options selected. Consult with your sales representative.

Example: LHQM LED G

LHQM	LED				
Family	**Lamp type**	**Housing color**	**Letter color**	**Options**	
LHQM Stencil face, single face plate with extra face plate	LED Two 1.5W/9.6V white LED	(blank) White B Black	R Red G Green	HO High-output Ni-cad[1] HO R0 High-output option, less lamp heads SD Self-diagnostics	NOM Meets Mexican standards[2] NOM SALIDA Salida signage (non-UL)[3] BAA Buy America(n) Act Compliant

Notes
1 When operating ERE SQ T remotes off of HO battery, temperature range of LHQM LED is limited to 68°-104°F (20°-40°C), with a 48-hour battery recharge time.
2 Available in black or white. Consult factory for options.
3 Only available in white. NOM standard.
4 Only compatible with self-diagnostic option. (ex: HO SD)
5 Only compatible with HO or HO R0 with SD option. See spec sheet ELA-Q-LED.
6 See spec sheet ELA-WG.
7 See spec sheet ELA-Stemkits.
8 See spec sheet ERE. When operating ERE SQ T remotes off of HO battery, temperature range of LHQM LED is limited to 68°-104°F (20°-40°C), with a 48-hour battery recharge time.
9 Not available with SD. Only compatible with HO or HO R0 option. When operating ERE SQ T remotes off of HO battery, temperature range of LHQM LED is limited to 68°-104°F (20°-40°C), with a 48-hour battery recharge time.

TYPE
E1

LITHONIA LIGHTING®

FEATURES & SPECIFICATIONS

INTENDED USE — Ideal for applications requiring attractive, quick-installation exit signs and low energy consumption. **Certain airborne contaminants can diminish the integrity of acrylic and/or polycarbonate. Click here for Acrylic-Polycarbonate Compatibility table for suitable uses.**

CONSTRUCTION — Engineering-grade thermoplastic housing is impact-resistant, scratch-resistant, and corrosion-proof. UL94V-0 flame rating. UV-stable resin resists discoloration from natural and man-made light sources.

Rugged unibody housing snaps together with no additional mechanical fasteners. Faceplate and back cover are interchangeable on housing. Positive snap-fit tabs hold faceplate securely, yet easily removable for lamp compartment access.

Universal directional Chevron inserts are easily removed and reinserted. Uniform illumination without shadows or hot spots. Reinforced, impact-resistant color panels. Letters 6" high with 3/4" stroke, with 100 ft. viewing distance rating, based upon UL924 standards.

U.S. Patent No. 5,526,251; 5,611,163; 5,739,639; 5,954,423; 5,988,825; 6,152,581; D383,501 ; D495,751 and 6,502,044. Other patents pending.

OPTICS — LEDs mounted on printed circuit boards. Low energy consumption – less than one watt. LED lamp operates in normal (AC input) and emergency (DC input) modes.

The typical life of the exit LED lamp is 5 years, based on 24/7 operation.

ELECTRICAL — Dual voltage input capability (120/277V) and 120V through 277V for MVOLT with SD.

Low-voltage disconnect prevents excessively deep discharge that can permanently damage battery. Conveniently located test switch and LED provide visual and manual means of monitoring system.

Constant-current series charger minimizes energy consumption and provides low operating costs. Printed circuit boards are 100% quality tested during manufacturing. Current-limiting charger circuitry protects printed circuit boards from shorts.

AC/LV reset (line latch) allows battery connection before AC power is applied and aids in preventing battery damage from deep discharge.

Crystal oscillator timing system with watchdog protection for precision accuracy.

Brownout protection is automatically switched to emergency mode when supply voltage drops below 80% of nominal.

Battery: Sealed, maintenance-free nickel-cadmium battery delivers 90-minutes capacity to emergency lamps. Two-state constant-current charge maximizes battery life and automatically recharges after battery discharge.

Diagnostics: Single-point microcomputer control for all electronic features.

Single multi-chromatic LED indicator to display two-state charging, test activation and three-state diagnostic status.

SELF-DIAGNOSTICS (SD and AELR option):
Test switch provides manual activation of 30-second diagnostic testing for on-demand visual inspection. Self-diagnostic testing for five minutes every 30 days and 90 minutes every six months.

Diagnostic evaluation of LED light source, AC to DC transfer, charging and battery condition. Continuously monitors AC functionality.

AELR option: STAR (Self-testing Automated Reporting) radio transmits monthly and annual test results and diagnostics information for automated reporting requirements.
For more information visit AcuityBrands.com/STAR

INSTALLATION — Universal mounting canopy for top or end mount. Back mount standard for single face only. Easily removed mounting knockouts. J-box pattern on back panel. Housing snaps to canopy with four positive-locking tabs. Cam-locking pin tightly secures housing to canopy.

Ships standard with additional face plate.

star QUANTUM®
Thermoplastic Exits

LQM

LED LAMPS

Specifications
Length: 11-3/4 (29.8)
Depth: 2 (5.1)
Height: 7-5/8 (19.3)
Weight: 2.6 lbs (1.2 kgs)
All dimensions are inches (centimeters) unless otherwise specified.

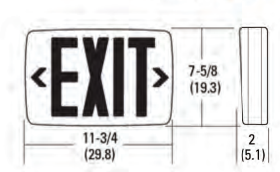

LISTINGS — UL damp location listed 50°-104°F (10°-40°C) standard. NOM Certified (see options). Meets UL924, NFPA 101 (current Life Safety Code), NEC and OSHA illumination standards. Meets all applicable FCC Title 47, Part 15, Subpart B requirements.

WARRANTY — 5-year limited warranty. (Battery is prorated.) This is the only warranty provided and no other statements in this specification sheet create any warranty of any kind. All other express and implied warranties are disclaimed. Complete warranty terms located at: www.acuitybrands.com/support/warranty/terms-and-conditions

Note: Actual performance may differ as a result of end-user environment and application.
All values are design or typical values, measured under laboratory conditions at 25 °C.
Specifications subject to change without notice.

† Exit Signs Certified in the CA Title 20 Appliance Efficiency Database.

CS Looking for Contractor Select readily available configurations? Click here to visit Contractor Select™ spec sheet or go to www.contractorselect.com

Example: LQM S W 3 R 120/277 EL N
Example: LQM S W 3 R MVOLT EL N SD
Example: LQM S W 3 R MVOLT EL N SD AELR

ORDERING INFORMATION For shortest lead times, configure product using **bolded options.**

LQM							
Family	**Face type**	**Housing color**	**Number of faces**	**Letter color**	**Input voltage**	**Operation**	**Options**
LQM[1]	**S** Stencil	**(blank)** Black **W** White	**3** Single face with extra faceplate and color panel	**R** Red **G** Green	**120/277** Dual voltage **MVOLT** Multi volt 120-277, 50/60hz[2]	**(blank)** AC only **X2** Primary and secondary AC inputs provided[3] **EL N** Nickel cadmium battery	**(blank)** None NOM NOM certified for Mexico[4] SD Self-diagnostics[5] AELR Automatic Emergency Lighting Reporting[6]

Accessories: Order as separate item.			
ELA WG1	Back-mount wireguard[7]	ELA LQMUS12	12" stem kit[8]

Notes
1 LQM available with Custom Signage. See spec sheet, Custom-Signage.
2 Only available with EL N SD. See Example for ordering.
3 Not available with other options. Both circuits can be energized at the same time.
4 Available with stencil face and white housing only. Not available with MVOLT EL N SD configuration.
5 Only available with MVOLT and EL N operation. See Example for ordering.
6 Only available with MVOLT EL N SD. AELR transmits monthly and annual test results and diagnostics information for automated reporting requirements.
7 See spec sheet ELA-WG.
8 See spec sheet ELA-Stemkits.

TYPE
E2

LITHONIA LIGHTING®

FEATURES & SPECIFICATIONS

INTENDED USE — Provides a minimum of 90 minutes illumination for the rated wattage upon loss of AC power to meet and exceed code required emergency lighting. Ideal for applications requiring attractive LED unit equipment with quick installation and unparalleled performance for lower mounting heights. **Certain airborne contaminants can diminish the integrity of acrylic and/or polycarbonate. Click here for Acrylic-Polycarbonate Compatibility table for suitable uses.**

CONSTRUCTION — The housing is a standard white (black optional) thermoplastic with a compact and low-profile contemporary design. It is 5VA flame rated, impact-resistant, scratch-resistant and corrosion proof. The UV-stable resin resists discoloration from natural and man-made light sources. There is a low-profile, integrated and back-lit test switch with an easily visible multi-color LED status indicator. The back-plate contains a universal j-box mounting pattern to facilitate ease of installation on a wide variety of j-boxes and the front housing allows tool-less access for ease of maintenance.

ELM2LF: Fixed lamp head arrangement for ease of installation and maximum path of egress aiming coverage with no aiming required for wall mount applications.

ELM2L: Unique track and swivel arrangement permits full range of direction for lamp head adjustment.

OPTICS — Both the ELM2L and ELM2LF feature two, high performance LEDs with acrylic lens' rated at 1.2 watts each and delivering a total of 220 lumens in a linear pattern (LP220L). The typical life of an LED is 10 years. The LED light sources typically never need to be replaced under normal conditions for normal off applications.

CCT: 5000K.

ELECTRICAL — Orderable in multiple voltages (see ordering tree for specific voltages).

Current-limiting charger maximizes battery life and minimizes energy consumption and provides low operating costs. Small battery chargers Certified in the CA Title 20 Appliance Efficiency Database.

Short-circuit protection — current-limiting charger circuitry protects printed circuit board from shorts.

Regulated charge voltage maintains constant-charge voltage over a wide range of line voltages.

Prevents over/undercharging that shortens battery life and reduces capacity. Filtered charger input minimizes charge voltage ripple and extends battery life.

BATTERY: Sealed, maintenance-free nickel-cadmium or Lithium Iron Phosphate.

Lithium Iron Phosphate battery powers both on board LEDs and up to 2.4W additional LED remote lamp heads simultaneously or offers extended run-time up to 3 hours.

Automatic 24-hour recharge after a 90-minute discharge.

Advanced electrical design provides constant light output throughout the entire discharge period.

Brownout protection is automatically switched to emergency mode when supply voltage drops below approximately 80 percent nominal of 120, 220, 277 or 347. Other input voltages may vary.

AC/LVD reset allows battery connection before AC power is applied and prevents battery damage from deep discharge.

SELF-DIAGNOSTICS and REMOTE TEST (SDRT and AELR option):
Self-Diagnostics: Continuously monitors AC functionality. Test switch and remote tester (RTKIT accessory) provide manual activation of 30-second diagnostic testing for on-demand visual inspection. Standard derangement monitoring will indicate disconnected battery, charger failure and displays green flashing indicator light while in emergency mode. Single multi-chromatic LED indicator to display two-state charging, test activation and three-state self-diagnostics.

Self-diagnostic testing: Five minutes every 30 days and 90 minutes annually. Diagnostic evaluation of lamps, AC to DC transfer, battery charging and condition of microprocessor. Automatic test is easily postponed for eight hours by activating manual test switch or use of remote tester (RTKIT accessory).

AELR option: STAR (Self-testing Automated Reporting) radio transmits monthly and annual test results and diagnostics information for automated reporting requirements.
For more information visit AcuityBrands.com/STAR

INSTALLATION — Wall mount and ceiling mount standard for ELM2L. Wall mount only for ELM2LF. Blind-mate connector ensures easy installation and safe maintenance. 7/8" entrance provision at top of unit for standard 1/2" conduit entry. Tool-less removal of front cover from back-plate for ease of installation and maintenance.

LISTINGS — UL damp location listed standard and wet location listed when used with the WPVS accessory, all at 50-104°F (10-40°C). Meets or exceeds all applicable requirements for UL 924, NFPA 101 (current Life Safety Code), NFPA 70 (NEC), NOM (Norma Oficial Mexicana), California Energy Commission Title 20 section 1605.3 (W)(4), FCC Title 47, Part 15, Subpart B and OSHA. List and labeled to comply with Canadian Standards C22.2 No. 141-10.

BUY AMERICAN ACT — Product with the BAA option is assembled in the USA and meets the Buy America(n) government procurement requirements under FAR, DFARS and DOT regulations.
Please refer to www.acuitybrands.com/buy-american for additional information.

WARRANTY — 5-year limited warranty. This is the only warranty provided and no other statements in this specification sheet create any warranty of any kind. All other express and implied warranties are disclaimed. Complete warranty terms located at: www.acuitybrands.com/support/warranty/terms-and-conditions

NOTE: Actual performance may differ as a result of end-user environment and application.
All values are design or typical values, measured under laboratory conditions at 25 °C.
Specifications subject to change without notice.

† Small Battery Chargers Certified in the CA Title 20 Appliance Efficiency Database.

NOM BAA LISTED

star QUANTUM®
Contemporary Commercial LED Emergency Light

ELM2L
Aimable Optics

ELM2LF
Fixed Optics

LITHIUM IRON PHOSPHATE
Nickel Cadmium

MOUNTING AND SPECIFICATIONS
All dimensions are inches (centimeters) unless otherwise indicated.

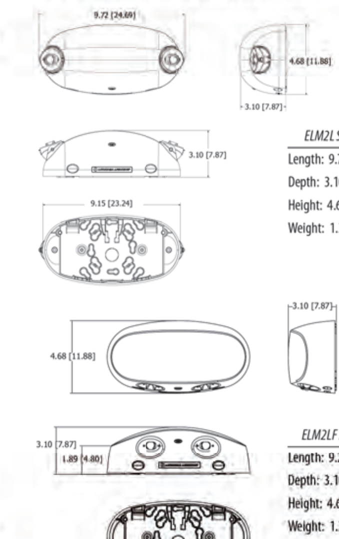

ELM2L Specifications
Length: 9.72 (24.69)
Depth: 3.10 (7.87)
Height: 4.68 (11.88)
Weight: 1.31lbs (0.59kg)

ELM2LF Specifications
Length: 9.22 (23.42)
Depth: 3.10 (7.87)
Height: 4.68 (11.88)
Weight: 1.25lbs (0.57kg)

design select

Items marked by a shaded background qualify for the Design Select program and ship in 15 days or less. To learn more about Design Select, visit www.acuitybrands.com/designselect.
*See ordering tree for details

TYPE
E3

LITHONIA LIGHTING®

FEATURES & SPECIFICATIONS

INTENDED USE

To be powered by Quantum® LED series unit or combo with high-output option as part of an emergency lighting system providing light for the path of egress. Remote lamp head matches the appearance of the Quantum LED series family units. **Certain airborne contaminants can diminish integrity of acrylic and/or polycarbonate. Click here for Acrylic-Polycarbonate Compatibility table for suitable uses.**

CONSTRUCTION

Single or twin heads available. Fully adjustable lamp heads to meet all aiming requirements. Strong, compact and corrosion-resistant with a UL94V-0 flame rating. Constructed of UV-stabilized thermoplastic that resists discoloration by natural or artificial sunlight.

Outdoor remotes (QWP) are standard cast aluminum, sealed and gasketed. For use in damp and wet location areas.

Lamp housing snaps off for easy lamp replacement.

OPTICS

Lamps: 12 series parallel, 1.5W white LEDs per head. The typical life of the LED lamp is 10 years.

INSTALLATION

Mounting base for use with single- or twin-head applications. Mounts to a single-gang switch box.

LISTINGS

UL Listed. Damp location listed (ELA Q) 50°F to 104°F (10°C to 40°C). Wet location listed (ELA QWP) 14°F to 122°F (-10°C to 50 °C).

WARRANTY

5-year limited warranty. This is the only warranty provided and no other statements in this specification sheet create any warranty of any kind. All other express and implied warranties are disclaimed. Complete warranty terms located at: www.acuitybrands.com/support/warranty/terms-and-conditions

NOTE: Actual performance may differ as a result of end-user environment and application.
All values are design or typical values, measured under laboratory conditions at 25 °C.
Specifications subject to change without notice.

QUANTUM®
Thermoplastic Emergency Light

ELA Q

Remote Fixture
Adjustable LED Lamp Head

Specifications
Q single: 6-5/8" W x 4-3/4" H
Q twin: 8-1/4" W x 4-1/4" H
QWP single: 4-1/2" W x 5-3/4" H
QWP twin: 8-1/2" W x 5-3/4" H

ORDERING INFORMATION Lead times will vary depending on options selected. Consult with your sales representative.

Example: ELA SD Q L0309

Catalog Number[1,2,3]	Description
ELA SD Q L0309 M12	Adjustable LED Single Lamp Head, White, Indoor, One 1.5W lamp, 9.6V, Self-Diagnostics
ELA SD QWP L0309 M12	Adjustable LED Single Lamp Head, Gray, Wet location, One 1.5W lamp, 9.6V, Self-Diagnostics
ELA T SD Q L0309 M12	Adjustable LED Twin Lamp Head, White, Indoor, Two 1.5W lamps, 9.6V, Self-Diagnostics
ELA T SD QWP L0309 M12	Adjustable LED Twin Lamp Head, Gray, Wet location, Two 1.5W lamps, 9.6V, Self-Diagnostics
ELA B SD QWP L0309 M12	Adjustable LED Single Lamp Head, Black, Wet location, One 1.5W lamp, 9.6V, Self-Diagnostics
ELA B T SD QWP L0309 M12	Adjustable LED Twin Lamp Head, Black, Wet location, Two 1.5W lamps, 9.6V, Self-Diagnostics

Accessories: *Order as separate item.*	
ELA WG1	Wireguard, 15"W x 13-1/2" H x 6" D

Notes
1. White standard for Q, gray standard for QWP.
2. For use with LHQM LED.
3. SD must be ordered in combination with LHQM LED fixtures. Not available with ELM2LF, ELM2L, ELM4L, ELM6L.

BRAMIC DESIGN GROUP PLLC
8003 S. GALILEO LN.
TUCSON, AZ 85747
PHONE: (520) 401-9183

COPYRIGHT NOTICE
This drawing is the property of the above referenced Professional and is not to be used for any purpose other than the specific project and site names herein, and cannot be reproduced in any manner without the express written permission from the Professional.

DATE	ISSUE
05.17.24	ISSUED FOR PERMIT REVIEW SET

DATE	REVISION

PROFESSIONAL SEAL

Registered Professional Engineer (Elec.)
CERTIFICATE NO.
32749
SARAH JEWETT
LESKA
Date Signed 07/18/2024
ARIZONA, U.S.A.
EXPIRES 09/30/2025

PROFESSIONAL IN CHARGE
SLL

PROJECT MANAGER
SLL/KY

QUALITY CONTROL
SLL/KY

DRAWN BY
KY/RW/RJJ

PROJECT ADDRESS
2920 S. PARK AVE
TUCSON ARIZONA 85713

VALVOLINE
INSTANT
OIL CHANGE

BDG PROJECT NUMBER
23-849

SHEET NAME
LIGHT FIXTURE CUT SHEETS

EDA
7536 N. La Cholla Blvd.
Tucson, Arizona 85741
Phone (520) 622-2196
Fax (520) 622-2198
www.eda-az.com
Project #: 23110

THESE DOCUMENTS ARE INSTRUMENTS OF SERVICE AND PROTECTED BY COPYRIGHT. THESE DOCUMENTS ARE NOT TO BE REPRODUCED OR UTILIZED FOR ANY PURPOSE OTHER THAN ORIGINALLY INTENDED UNLESS AUTHORIZED, IN WRITING BY ELECTRICAL DESIGN ASSOCIATES, INC.

SHEET #
E-1.2

Hardi-Brick OPTION

TYPE D

D-Series Size 1
LED Wall Luminaire

d"series

BAA

Specifications
Luminaire

Width:	13-3/4" (34.9 cm)	Weight:	12 lbs (5.4 kg)
Depth:	10" (25.4 cm)		
Height:	6-3/8" (16.2 cm)		

Back Box (BBW, E20WC)

Width:	13-3/4" (34.9 cm)	BBW Weight:	5 lbs (2.3 kg)
Depth:	4" (10.2 cm)	E20WC Weight:	10 lbs (4.5 kg)
Height:	6-3/8" (16.2 cm)		

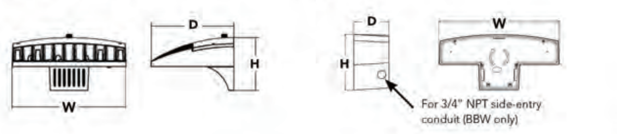

Introduction

The D-Series Wall luminaire is a stylish, fully integrated LED solution for building-mount applications. It features a sleek, modern design and is carefully engineered to provide long-lasting, energy-efficient lighting with a variety of optical and control options for customized performance.

With an expected service life of over 20 years of nighttime use and up to 74% in energy savings over comparable 250W metal halide luminaires, the D-Series Wall is a reliable, low-maintenance lighting solution that produces sites that are exceptionally illuminated.

Ordering Information

EXAMPLE: DSXW1 LED 20C 1000 40K T3M MVOLT DDBTXD

DSXW1 LED

Series	LEDs	Drive Current	Color temperature	Distribution	Voltage	Mounting	Control Options
DSXW1 LED	10C 10 LEDs (one engine); 20C 20 LEDs (two engines)[1]	350 350 mA; 530 530 mA; 700 700 mA; 1000 1000 mA (1 A)[1]	30K 3000 K; 40K 4000 K; 50K 5000 K; AMBPC Amber phosphor converted	T2S Type II Short; T2M Type II Medium; T3S Type III Short; T3M Type III Medium; T4M Type IV Medium; TFTM Forward Throw Medium	MVOLT[2]; 120[3]; 208[3]; 240[3]; 277[3]; 347[3,4]; 480[3,4]	Shipped included: (blank) Surface mounting bracket; BBW Surface-mounted back box (for conduit entry)[5]	Shipped installed: PE Photoelectric cell, button type[6]; DMG 0-10v dimming wires pulled outside fixture (for use with an external control, ordered separately); PIR 180° motion/ambient light sensor, <15' mtg ht[1,7]; PIRH 180° motion/ambient light sensor, 15-30' mtg ht[1,7]; PIR1FC3V Motion/ambient sensor, 8-15' mounting height, ambient sensor enabled at 1fc[1,7]; PIRH1FC3V Motion/ambient sensor, 15-30' mounting height, ambient sensor enabled at 1fc[1,7]; E20WC Emergency battery backup (includes external component enclosure), CA Title 20 compliant[8,9]

Other Options		Finish	
Shipped installed: SF Single fuse (120, 277 or 347V)[3,10]; DF Double fuse (208, 240 or 480V)[3,10]; HS House-side shield[11]; SPD Separate surge protection[12]	Shipped separately[11]: BSW Bird-deterrent spikes; VG Vandal guard; DDL Diffused drop lens	DDBXD Dark bronze; DBLXD Black; DNAXD Natural aluminum; DWHXD White; DSSXD Sandstone; DDBTXD Textured dark bronze; DBLBXD Textured black; DNATXD Textured natural aluminum	DWHGXD Textured white; DSSTXD Textured sandstone

Accessories
Ordered and shipped separately

DSXWHS U	House-side shield (one per light engine)
DSXWBSW U	Bird-deterrent spikes
DSXW1VG U	Vandal guard accessory

NOTES
1. 20C 1000 is not available with PIR, PIRH, PIR1FC3V or PIRH1FC3V.
2. MVOLT driver operates on any line voltage from 120-277V (50/60 Hz).
3. Single fuse (SF) requires 120, 277 or 347 voltage option. Double fuse (DF) requires 208, 240 or 480 voltage option.
4. Only available with 20C, 700mA or 1000mA. Not available with PIR or PIRH.
5. Back box ships installed on fixture. Cannot be field installed. Cannot be ordered as an accessory.
6. Photocontrol (PE) requires 120, 208, 240, 277 or 347 voltage option. Not available with motion/ambient light sensors (PIR or PIRH).
7. Reference Motion Sensor table on page 3.
8. Same as old ELCW. Cold weather (-20C) rated. Not compatible with conduit entry applications. Not available with BBW mounting option. Not available with fusing. Not available with 347 or 480 voltage options. Emergency components located in back box housing. Emergency mode IES files located on product page at www.lithonia.com
9. Not available with SPD.
10. Not available with E20WC.
11. Also available as a separate accessory; see Accessories information.
12. Not available with E20WC.

© 2013-2023 Acuity Brands Lighting, Inc. All rights reserved.

TYPE F

LITHONIA LIGHTING®

DIGITAL NAVIGATION
Ordering Tree | SensorSwitch JOT | nLight Platform | Photometrics | Performance Data

CPX LED PANEL
Configurable
1' x 4', 2' x 2' and 2' x 4'

FEATURES & SPECIFICATIONS

INTENDED USE — The CPX Series LED is a low-glare back-lit panel featuring an external driver. This cost-effective, reliable flat panel is visually comfortable and can be recessed mounted. Suitable for many applications such as schools, offices, retail, convenience stores, hospitals, healthcare facilities and other commercial spaces. A typically configured CPX features a Unified Glare Rating (UGR) starting at 17. Certain airborne contaminants can diminish the integrity of acrylic. Click here for Acrylic Environmental Compatibility table for suitable uses. U.S. Patent No. 10,681,784.

CONSTRUCTION — A metal frame with satin white lens provides excellent shielding and uniform luminance. CPX's low-profile design provides increased installation flexibility especially in restricted plenum spaces. The back plate includes integral T-bar clips for installation into T-grid ceilings.

ELECTRICAL — Direct-lit Panel with Long-Life LEDs, coupled with a high-efficiency driver, provide superior illumination for extended service life. Greater than 70% LED lumen maintenance at 60,000 hours (L80>60,000). 0-10V dimming driver. Options available for dimming to 1% or 10%. Contains non-isolated dimming leads.

Integrated Wireless Sensor (single room control) — SensorSwitch wireless dimming (JOT) or luminaire embedded occupancy sensor control (VPIR15) with JOT pairing for wall switch On/Off/Dimming control or auto off when the space is unoccupied. See page 8 for more details of the integrated wireless sensor.

Integrated Sensor (nLight® Wired Networking) — This sensor is nLight-enabled, meaning it has the ability to communicate over an nLight network. When wired, using CAT-5 cabling, with other nLight-enabled sensors, power packs, or WallPods, an nLight control zone is created. Once linked to a Gateway, directly or via a Bridge, the zone becomes capable of remote status monitoring and control via SensorView software.

Integrated Smart Sensor (nLight Air Wireless Platform) — The RES7 sensor is nLight AIR enabled, meaning it has the ability to communicate over the wireless nLight control platform. It is available with an automatic dimming photocell, and either a digital PIR or a microphonics (PDT) dual technology occupancy sensor. It pairs to other luminaires and wall switches through our mobile app, CLAIRITY+, which allows for simple sensor adjustment.

LISTINGS — CSA certified to meet US and Canadian standards. Damp location listed. IC rated. IP5X Rated. DesignLights Consortium® (DLC) qualified product. Not all versions of this product may be DLC qualified. Please check the DLC Qualified Products List at www.designlights.org/QPL to confirm which versions are qualified. Rated for NSF/ANSI Standard 2 - Light Fixture for Splash Zone and Non-Food Zone. NOM Certified.

BUY AMERICAN ACT — Product with the BAA option is assembled in the USA and meets the Buy America(n) government procurement requirements under FAR, DFARS and DOT regulations. Please refer to www.acuitybrands.com/buy-american for additional information.

WARRANTY — 5-year limited warranty. This is the only warranty provided and no other statements in this specification sheet create any warranty of any kind. All other express and implied warranties are disclaimed. Complete warranty terms located at: www.acuitybrands.com/support/warranty/terms-and-conditions

Note: Actual performance may differ as a result of end-user environment and application. All values are design or typical values, measured under laboratory conditions at 25 °C. Specifications subject to change without notice.

ds · CSA C US · DLC LISTED · NSF · NOM · ISO Class 5-9† · nLight ENABLED · BAA · LOW UGR · LED · IC RATED · JOT JUST ONE TOUCH

† Tested in accordance with ISO 14644-14; suitable for ISO Class 5-9 positive and negative pressure clean rooms.

Embed nLight controls today. Prepare for tomorrow.

Now	Tomorrow
User-friendly install	Scalability
Enhanced energy savings	Space configuration
Code compliance	Future-ready

A+ Capable Luminaire

This item is an A+ capable luminaire, which has been designed and tested to provide consistent color appearance and out-of-the-box control compatibility with simple commissioning when used with Acuity Brands controls products.

All configurations of this luminaire are calibrated and tested to meet the Acuity Brands' specifications for chromatic consistency – including color rendering, color fidelity, and color temperature tolerance around standard CIE chromaticity coordinates.

To learn more about Acuity A+ standards, specifications, and testing visit www.acuitybrands.com/aplus.

ds design select

Items marked by a shaded background qualify for the Design Select program and ship in 15 days or less. To learn more about Design Select, visit www.acuitybrands.com/designselect.
*See ordering tree for details

TYPE G

SATCO | NUVO

Project Name:

Location: | Prepared By:

NUVO 62-1680
7" LED DISK LIGHT W/ OCC

Notes

General	
Status	
Substitute	
Finish	
Wattage	13W
Style	Transitional
CCT (Kelvin)	3000K 4000K 5000K
Color Temperature	Warm to Cool White
Width (in.)	7.4
Height (in.)	1.45
Indoor or Outdoor Fixture	Indoor
Smart Product Info	
IOT Enabled	No
Specifications	
Technology	LED
CRI	90
Lumen Output	930L-1070L
Rated Hours	50000
Voltage	120V
Dimmable	Non-Dimmable
Photocell or Sensor	Has Occupancy Sensor
Weight (lb.)	0.77
Sloped Ceiling	Yes
Fixture Shape	Round
Fixture Material	Steel
Fixture Type	Disk Light
Operating Temperature	-35C (-31F) to +50C (+122F)
Compliance	
Safety Listing	cETLus
Location Rating	Damp
Energy Star	Yes
ES Unique ID	ESID-2399496
DLC Approved	No
CA T20 / T24 Rationale	California T24 2016 - 2022 JA8 Listed
California Status	Lawful for sale in California
Title 20 / 24 Status	California T24 Listed
California Prop 65	Lead
NEC Compliance	Clothes Closet Certified - Reg: 410.16 (A)(3) and 410.16 (C)(5)
RoHS Compliant	Yes
SDS Sheet	LED_Fixture
Additional Information	
Warranty	5 Year Limited - Fixtures

Copyright 2023 Satco Products, Inc.
All Rights Reserved

For More Information Visit:
https://www.satco.com/

TYPE EALS

RSX1 LED
Area Luminaire

BAA · ds

Specifications

EPA (ft²@0°):	0.57 ft² (0.05 m²)
Length:	21.8" (55.4 cm) (SPA mount)
Width:	13.3" (33.8 cm)
Height:	3.0" (7.6 cm) Main Body; 7.2" (18.4 cm) Arm
Weight: (SPA mount):	22.0 lbs (10.0 kg)

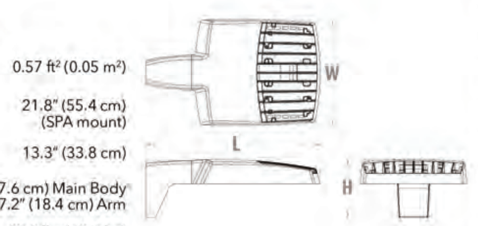

Introduction

The new RSX LED Area family delivers maximum value by providing significant energy savings, long life and outstanding photometric performance at an affordable price. The RSX1 delivers 7,000 to 17,000 lumens allowing it to replace 70W to 400W HID luminaires.

The RSX features an integral universal mounting mechanism that allows the luminaire to be mounted on most existing drill hole patterns. This "no-drill" solution provides significant labor savings. An easy-access door on the bottom of mounting arm allows for wiring without opening the electrical compartment. A mast arm adaptor, adjustable integral slipfitter and other mounting configurations are available.

ds design select

Items marked by a shaded background qualify for the Design Select program and ship in 15 days or less. To learn more about Design Select, visit www.acuitybrands.com/designselect.
*See ordering tree for details

ds Design Select options indicated by this color background.

Ordering Information

EXAMPLE: RSX1 LED P4 40K R3 MVOLT SPA DDBXD

RSX1 LED

Series	Performance Package	Color Temperature	Distribution	Voltage	Mounting
RSX1 LED	P1; P2; P3; P4	30K 3000K; 40K 4000K; 50K 5000K	R2 Type 2 Wide; R3 Type 3 Wide; R3S Type 3 Short; R4 Type 4 Wide; R4S Type 4 Short; R5 Type 5 Wide[1]; R5S Type 5 Short[1]; AFR Automotive Front Row; AFR90 Automotive Front Row Right Rotated; AFRL90 Automotive Front Row Left Rotated	MVOLT (120V-277V)[2]; HVOLT (347V-480V)[3]; XVOLT (277V-480V)[4]; (use specific voltage for options as noted) 120[5] 277[5]; 208[5] 347[5]; 240[5] 480[5]	SPA Square pole mounting (3.0" min. SQ pole for 1 at 90°, 3.5" min. SQ pole for 2, 3, 4 at 90°); RPA Round pole mounting (3.2" min. dia. RND pole for 2, 3, 4 at 90°, 3.0" min. dia. RND pole for 1 at 90°, 2 at 180°, 3 at 120°); MA Mast arm adaptor (fits 2-3/8" OD horizontal tenon); IS Adjustable slipfitter (fits 2-3/8" OD tenon)[6]; WBA Wall bracket[1]; WBASC Wall bracket with surface conduit box; AASP Adjustable tilt arm square pole mounting[6]; AARP Adjustable tilt arm round pole mounting[6]; AAWB Adjustable tilt arm with wall bracket[6]; AAWSC Adjustable tilt arm wall bracket and surface conduit box[6]

Options		Finish
Shipped Installed: HS House-side shield[7]; PE Photocontrol, button style[8,9]; PER7 Seven-wire twist-lock receptacle only (no controls)[8,10,11]; SF Single fuse (120, 277, 347)[5]; DF Double fuse (208, 240, 480)[5]; SPD20KV 20KV Surge pack (10KV standard); FAO Field adjustable output[9]; DMG 0-10V dimming extend out back of housing for external control (control ordered separate)[9]	Shipped Installed: *Standalone and Networked Sensors/Controls (factory default settings, see table page 9); NLTAIR2 PIRHN nLight AIR generation 2, with Networked, Bi-Level motion/ambient sensor[9,12,13,14]; BAA Buy America(n) Act Compliant; CCE Coastal Construction[15]; *Note: NLTAIR2 PIRHN with nLight Air can be used as a standalone or networked solution. Sensor coverage pattern is affected when luminaire is tilted. Shipped Separately (requires some field assembly): EGS External glare shield[7]; EGFV External glare full visor (360° around light aperture)[7]; BS Bird spikes[16]	DDBXD Dark Bronze; DBLXD Black; DNAXD Natural Aluminum; DWHXD White; DDBTXD Textured Dark Bronze; DBLBXD Textured Black; DNATXD Textured Natural Aluminum; DWHGXD Textured White

© 2018-2023 Acuity Brands Lighting, Inc. All rights reserved.

BRAMIC DESIGN GROUP PLLC
8003 S. GALILEO LN.
TUCSON, AZ 85747
PHONE: (520) 401-9183

COPYRIGHT NOTICE
This drawing is the property of the above referenced Professional and is not to be used for any purpose other than the specific project and site names herein, and cannot be reproduced in any manner without the express written permission from the Professional.

DATE	ISSUE
05.17.24	ISSUED FOR PERMIT REVIEW SET

△ DATE	REVISION

PROFESSIONAL SEAL

Registered Professional Engineer (Elec.)
CERTIFICATE NO. 32749
SARAH JEWETT LESKA
Date Signed 07/18/2024
ARIZONA, U.S.A.
EXPIRES 09/30/2025
Sarah J. Leska

PROFESSIONAL IN CHARGE
SLL

PROJECT MANAGER
SLL/KY

QUALITY CONTROL
SLL/KY

DRAWN BY
KY/RW/RJJ

PROJECT ADDRESS
2920 S. PARK AVE
TUCSON ARIZONA 85713

Valvoline Instant Oil Change

VALVOLINE INSTANT OIL CHANGE

BDG PROJECT NUMBER
23-849

SHEET NAME
LIGHT FIXTURE CUT SHEETS

7536 N. La Cholla Blvd.
Tucson, Arizona 85741
Phone (520) 622-2196
Fax (520) 622-2198
www.eda-az.com

EDA

Project #: 23110

THESE DOCUMENTS ARE INSTRUMENTS OF SERVICE AND PROTECTED BY COPYRIGHT. THESE DOCUMENTS ARE NOT TO BE REPRODUCED OR UTILIZED FOR ANY PURPOSE OTHER THAN ORIGINALLY INTENDED UNLESS AUTHORIZED, IN WRITING BY ELECTRICAL DESIGN ASSOCIATES, INC.

SHEET #
E-1.3

Hardi-Brick OPTION

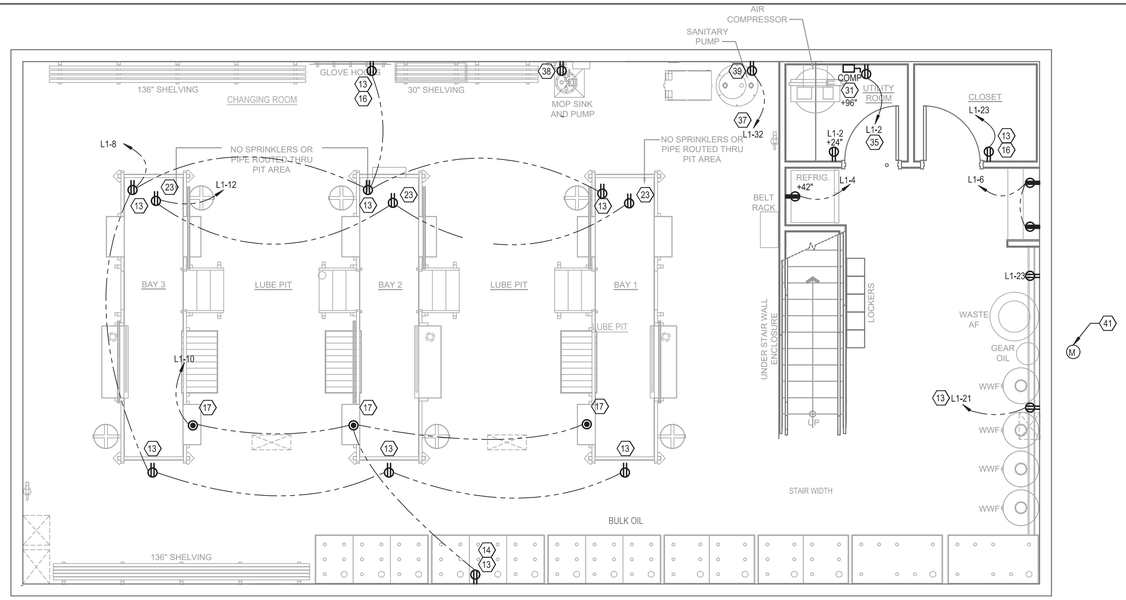

1 E-2.0 LOWER LEVEL POWER PLAN
Scale: 1/4" = 1'-0"

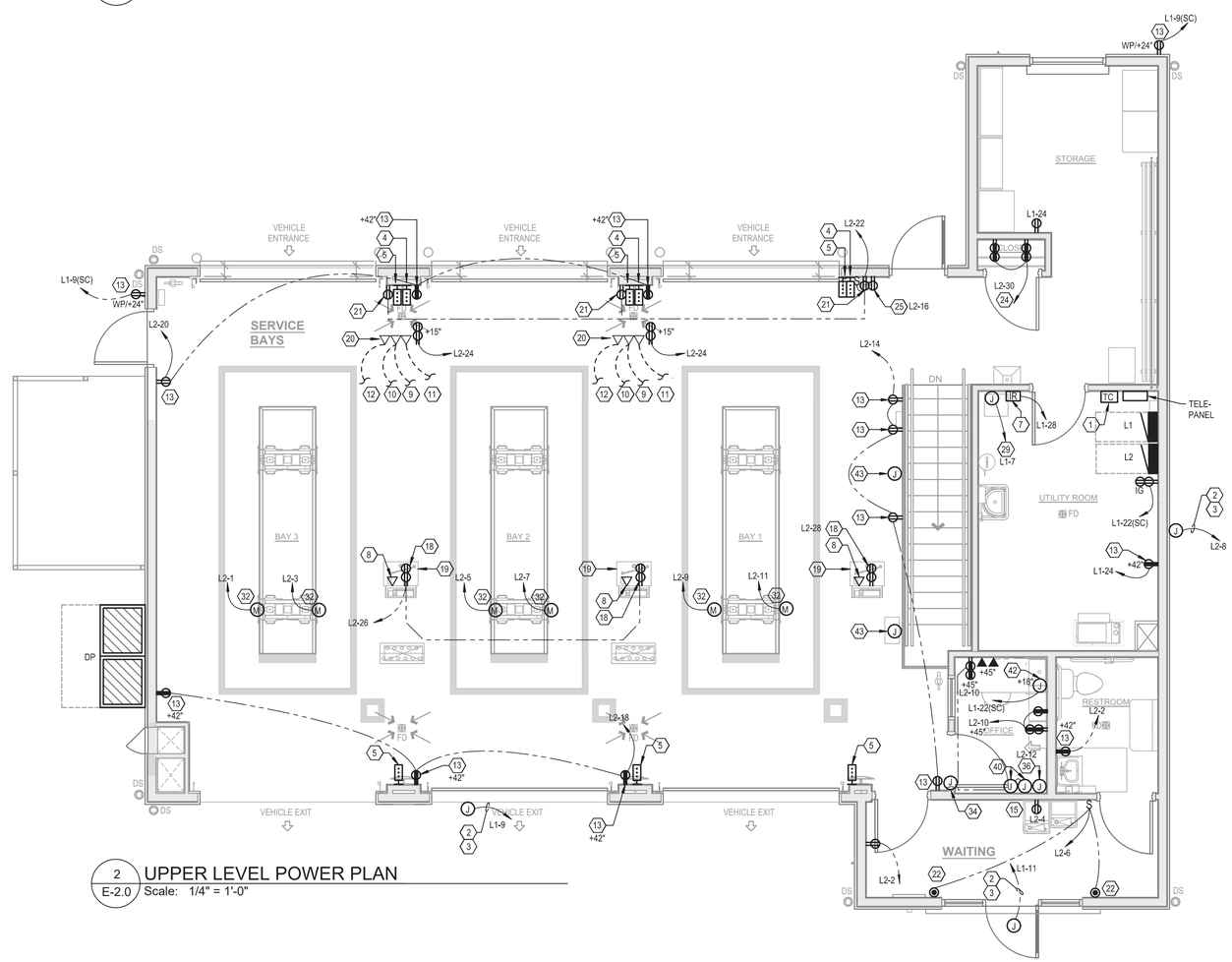

2 E-2.0 UPPER LEVEL POWER PLAN
Scale: 1/4" = 1'-0"

POWER KEY NOTES

1. TIME CONTROL.
2. ROUTE THROUGH TIME SWITCH FOR CONTROL OF LIGHTS/SIGNS.
3. MAKE CONNECTION TO BOX SIGN(S) PROVIDED BY OWNER, INSTALL J-BOX(ES) VERIFY MOUNTING HEIGHT AND EXACT LOCATION W/SIGN SUPPLIER.
4. DOOR OPERATOR NORTH: PROVIDE 3/4" CONDUIT TO EACH DOOR OPERATOR PUSH BUTTONS AND PHOTO EYE. SHARE A SINGLE JUNCTION BOX FOR EXIT/ENTRANCE DOORS AT CORRESPONDING BAY. VERIFY HEIGHT WITH ARCHITECTURAL DRAWINGS. CIRCUIT DOOR MOTOR AS NOTED (KEYNOTE 32).
5. DOOR OPERATOR SOUTH: BAY DOOR. PROVIDE 3/4" CONDUIT TO EACH DOOR OPERATOR PUSH BUTTONS AND PHOTO EYE. SHARE A SINGLE JUNCTION BOX FOR EXIT/ENTRANCE DOORS AT CORRESPONDING BAY. VERIFY HEIGHT WITH ARCHITECTURAL DRAWINGS. CIRCUIT DOOR MOTOR AS NOTED (KEYNOTE 32).
6. NOT USED.
7. IRRIGATION CONTROL, FOR REFERENCE ONLY. REFER TO ARCHITECTURAL DRAWINGS FOR EXACT MOUNTING HEIGHT AND DETAILS.
8. PROVIDE CAT6 CABLE TO MONITOR AND CREDIT CARD MACHINE. REFER TO RISER DIAGRAM.
9. DATA LINE: CAT6 8 CONDUCTOR TWISTED PAIR CABLE. CABLE IS RUN PIN TO PIN, 3'-0" PIGTAIL TERMINATED WITH RJ11 CONNECTORS AT BOTH ENDS. PROVIDE COMMUNICATION CONDUIT BETWEEN PODIUMS AND COMPUTER CONSOLE. REFER TO RISER DIAGRAM.
10. PROVIDE CAT6 DATA LINE 8 CONDUCTOR TWISTED PAIR CABLE TO CENTRAL COMPUTER IN OFFICE. REFER TO RISER DIAGRAM.
11. SINGLE PAIR TELEPHONE CABLE TO TELEPHONE PANEL. REFER TO RISER DIAGRAM.
12. PROVIDE CAT6 CABLE TO TELEPHONE PANEL. REFER TO RISER DIAGRAM.
13. GENERAL SERVICE GFCI RECEPTACLE. COORDINATE MOUNTING LOCATION WITH ALL TRADES PRIOR TO ROUGH-IN. MOUNT +24" AFF MIN TO BOTTOM OF BOX IN SERVICE BAYS.
14. COORDINATE MOUNTING HEIGHT WITH BULK TANKS. MOUNT AT 7'-0" AFF.
15. EWC. PROVIDE DEDICATED 120V GFCI RECEPTACLE. LOCATE GFCI IN READILY ACCESSIBLE LOCATION TO COMPLY WITH NEC 422.5(B).
16. COORDINATE MOUNTING HEIGHT WITH SHELVING. MOUNT 48" AFF ±.
17. GFCI TYPE RECEPTACLE MOUNTED AT CEILING.
18. MOUNT RECEPTACLE IN POS PODIUM.
19. POINT OF SALE PODIUM - PROVIDE (3) 3/4" CONDUITS (POWER, DATA, SECURITY) UP FROM FLOOR BELOW THROUGH 4" PODIUM BASE.
20. GREETER STATION - PROVIDE (4) 1" CONDUITS (POWER, DATA, SECURITY) UP FROM FLOOR BELOW AND INTO ENCLOSURE. MOUNT BOXES FOR POWER AND DATA OUTLETS ON INSIDE OF ENCLOSURE. COORDINATE STUB UP LOCATION IN FIELD WITH OWNER.
21. 20A DUPLEX RECEPTACLE (GFCI) MOUNTED AT 12" BELOW CEILING FOR INSTALLATION OF WALL MOUNTED AIR CIRCULATION FANS. CONTROL THRU WALL SWITCH AS INDICATED.
22. RECEPTACLE MOUNTED AT CEILING. PROVIDE SWITCH TO CONTROL RECEPTACLES ONLY FOR OWNER SIGNAGE.
23. 20A DUPLEX RECEPTACLE (GFCI) MOUNTED AT UNDERSIDE OF THE FLOOR FOR INSTALLATION OF CEILING OR CATWALK MOUNTED AIR CIRCULATION FANS.
24. (2) QUAD RECEPTACLES AT +60" AFF FOR TOOL BATTERY CHARGERS.
25. RECEPTACLE AT 24" AFF FOR BELL RINGER. RUN CONDUIT THROUGH WALL & UNDER SIDEWALK THROUGH CURB IN CUE LANE APPROXIMATELY 50' FROM BUILDING. REFER TO SERVICE BELL DETAIL ON CIVIL DRAWINGS AND COORDINATE ROUTING WITH VIOC CONSTRUCTION MANAGER.
26. NOT USED.
27. NOT USED.
28. NOT USED.
29. J-BOXES IN ACCESSIBLE LOCATION FOR CONTROL RELAYS, CONNECTION TO EF-2, TF-1 & LOWER LEVEL LIGHTS.
30. NOT USED.
31. AIR COMPRESSOR FUSED DISCONNECT LOCATED ON/AT UNIT.
32. DOOR OPENER MOTOR. CONNECT TO DOOR PUSH-BUTTON.
33. NOT USED.
34. T-STAT FOR RADIANT HEATERS. PROVIDE J-BOX & CONDUIT TO RESPECTIVE T-STAT. T-STAT SHALL BE LOW VOLTAGE PROGRAMMABLE.
35. RECEPTACLE FOR AIR DRYER #401.
36. PROVIDE SEPARATE 120V POWER FOR OIL/WATER SEPARATOR SUMP PUMP ALARM. PROVIDE LOW VOLTAGE WIRING TO SUMP ENCLOSURES. COORDINATE WITH PLUMBING CONTRACTOR.
37. OIL/WATER SEPARATOR. PROVIDE 120V POWER FOR OIL/WATER SEPARATOR SUMP PUMP ALARM. PROVIDE LOW VOLTAGE WIRING IN 3/4" CONDUIT TO REMOTE PUMP ALARM. COORDINATE WITH PLUMBING CONTRACTOR.
38. P18 - SUMP PUMP FOR SINK. PROVIDE NEMA 6 RECEPTACLE.
39. P16 - SANITARY SUMP PUMP, PROVIDE NEMA 6 RECEPTACLE.
40. PROVIDE RATE 120V POWER FOR EACH FOUNDATION SUMP PUMP ALARM EQUIPMENT. PROVIDE LOW VOLTAGE WIRING TO BOTH OUTDOOR SUMP ENCLOSURES. COORDINATE WITH PLUMBING CONTRACTOR.
41. P13 - FOUNDATION SUMP PUMP (120V, 1/2 HP) ENCLOSURE - SEE PLUMBING & CIVIL DRAWINGS FOR DETAIL AND EXACT LOCATION. PROVIDE DUPLEX RECEPTACLE WITH WET LOCATION IN-USE COVER INSIDE ENCLOSURE APPROXIMATELY 6" FROM TOP. PROVIDE 3/4" CONDUIT INTO ENCLOSURE FOR WIRING OF REMOTE PUMP ALARM. COORDINATE WITH P.C.
42. PROVIDE CONNECTION TO SECURITY CABINET AS RECOMMENDED BY INSTALLER.
43. PROVIDE 3/4" CONDUIT WITH PULLWIRE FROM THIS LOCATION TO UTILITY ROOM FOR LOW VOLTAGE WIRING. COORDINATE EXACT REQUIREMENTS IN FIELD WITH OWNER.

ELECTRICAL FEEDER SCHEDULE - MECHANICAL EQP

TAG	CIRCUIT	FEEDER	DISCONNECT SIZE	NOTES
COMP	DP-4	1"C., 2#6, #10 GRD.	60A	1,2,3

NOTES:

1. PROVIDE DISCONNECT: NEMA 1 FOR INTERIOR DRY LOCATIONS
   NEMA 3R FOR EXTERIOR OR WET LOCATIONS
   LOCATE ON UNISTRUT ADJACENT TO UNIT
2. FUSE FOR MOTOR OVERLOAD PROTECTION BASED ON NAMEPLATE DATA
3. 100K MAX AVAILABLE FAULT CURRENT; SCCR RATING TO INCLUDE ALL COMPONENTS, NO ADDITIONAL UPSTREAM PROTECTION

GENERAL NOTES:

A. RECEPTACLES WITHIN KITCHEN OR WITHIN 6' OF SOURCES OF WATER: PROVIDE GFCI RECEPTACLE. AT COUNTERS - MOUNT ABOVE COUNTER. OTHERWISE MOUNT +42"AFF. VERIFY MOUNTING HT PRIOR TO ROUGH-IN.

B. EXTERIOR RECEPTACLES, PROVIDE GFCI, WP WITH PLUG INSERTED DEVICES AND COVERS.

C. PROVIDE TAMPER-RESISTANT RECEPTACLES IN COMPLIANCE WITH NEC 406.12. ALL NON-LOCKING, 120V 20A RECEPTACLES SPECIFIED IN NEC 406.12 (1) THRU (7) SHALL BE UL LISTED TAMPER-RESISTANT RECEPTACLES. APPLIES TO OFFICES, CORRIDORS, WAITING ROOMS AND THE LIKE.

D. LOCATE DATA DEVICES ADJACENT TO RECEPTACLES IN UNIFORM MANNER SO EDGES OF FACEPLATES ARE APPROXIMATELY 1" APART.

E. OFFSET DEVICES ON SHARED WALLS. DO NOT INSTALL BACK TO BACK DEVICES.

SPECIAL NOTE:

MOUNT OUTLETS & SWITCHES IN LOWER PORTION OF "FRP" WALL FINISH, TOP OF "FRP" IS AT 52" A.F.F.

ALL ELECTRICAL DEVICES, SWITCHES, OUTLETS, ETC. SHALL BE GRAY WITH STAINLESS STEEL COVERPLATES.

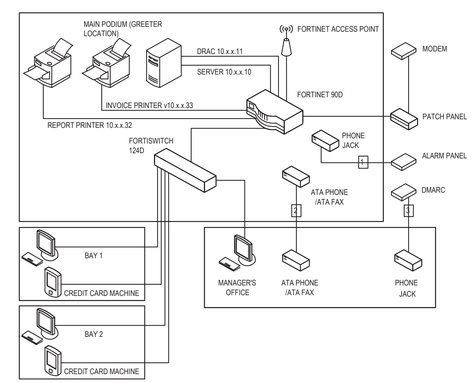

NETWORK WIRING DIAGRAM

1. CAT6 CABLE WITH TWO MALE RJ45 CONNECTIONS.
2. CAT6 CABLE WITH TWO PHONE JACKS ON EACH END LABELED ATA PHONE & ATA FAX.
3. CAT6 CABLE WITH PHONE JACK IN OFFICE AND EXTRA LOOPED CABLE AT DMARC.

3 E-2.0 RISER DIAGRAM
Scale: NOT TO SCALE

PER NEC 511.2 THIS LOCATION IS CLASSIFIED AS A MINOR REPAIR GARAGE, AND VENTILATION IN THE PIT AREAS MEETS THE REQUIREMENTS OF NEC TABLE 511.3(C). THEREFORE THIS AREA QUALIFIES AS AN UNCLASSIFIED LOCATION AND NOT AS HAZARDOUS PER NEC.

7536 N. La Cholla Blvd.
Tucson, Arizona 85741
Phone (520) 622-2196
Fax (520) 622-2198
www.eda-az.com
Project #: 23110
EDA

THESE DOCUMENTS ARE INSTRUMENTS OF SERVICE AND PROTECTED BY COPYRIGHT. THESE DOCUMENTS ARE NOT TO BE REPRODUCED OR UTILIZED FOR ANY PURPOSE OTHER THAN THOSE INTENDED UNLESS AUTHORIZED, IN WRITING BY ELECTRICAL DESIGN ASSOCIATES, INC.

Hardi-Brick OPTION

BRAMIC DESIGN GROUP PLLC
8003 S. GALILEO LN.
TUCSON, AZ 85747
PHONE: (520) 401-9183

COPYRIGHT NOTICE
This drawing is the property of the above referenced Professional and is not to be used for any purpose other than the specific project and site names herein, and cannot be reproduced in any manner without the express written permission from the Professional.

DATE	ISSUE
05.17.24	ISSUED FOR PERMIT REVIEW SET

DATE	REVISION

PROFESSIONAL SEAL

Registered Professional Engineer (Elec.)
CERTIFICATE NO. 32749
SARAH JEWETT LESKA
Date Signed 09/18/23
ARIZONA, U.S.A.
EXPIRES 09/30/2025
Sarah J. Leska

PROFESSIONAL IN CHARGE
SLL

PROJECT MANAGER
SLL/KY

QUALITY CONTROL
SLL/KY

DRAWN BY
KY/RW/RJJ

PROJECT ADDRESS
2920 S. PARK AVE
TUCSON ARIZONA 85713

Valvoline Instant Oil Change

VALVOLINE INSTANT OIL CHANGE

BDG PROJECT NUMBER
23-849

SHEET NAME
POWER PLANS & NETWORK DIAGRAM

SHEET #
E-2.0

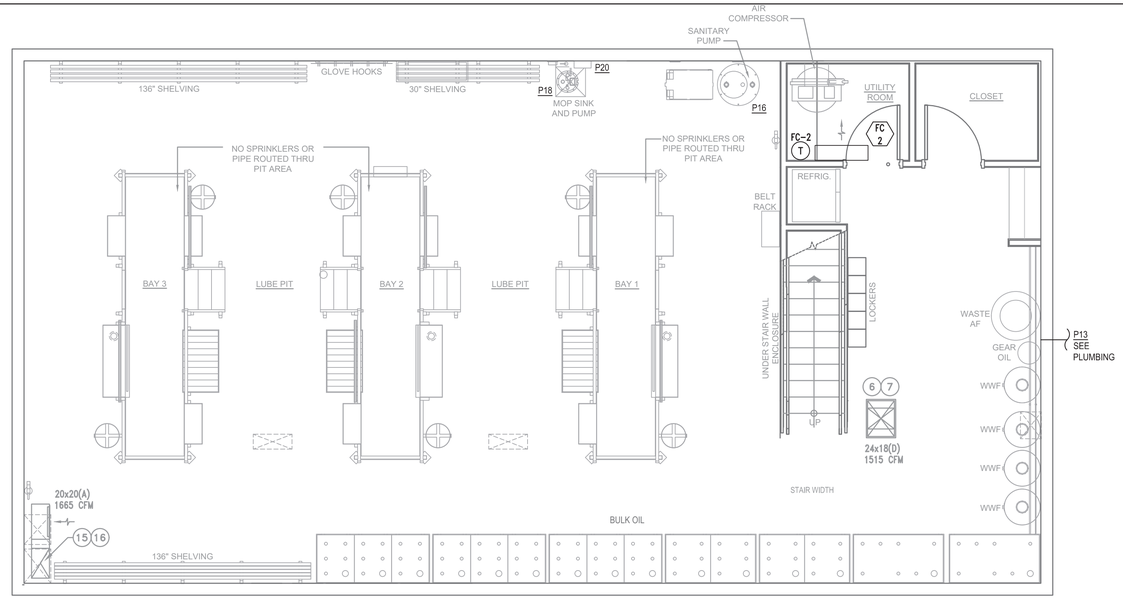

1 E-2.1 LOWER LEVEL MECHANICAL POWER PLAN
Scale: 1/4" = 1'-0"

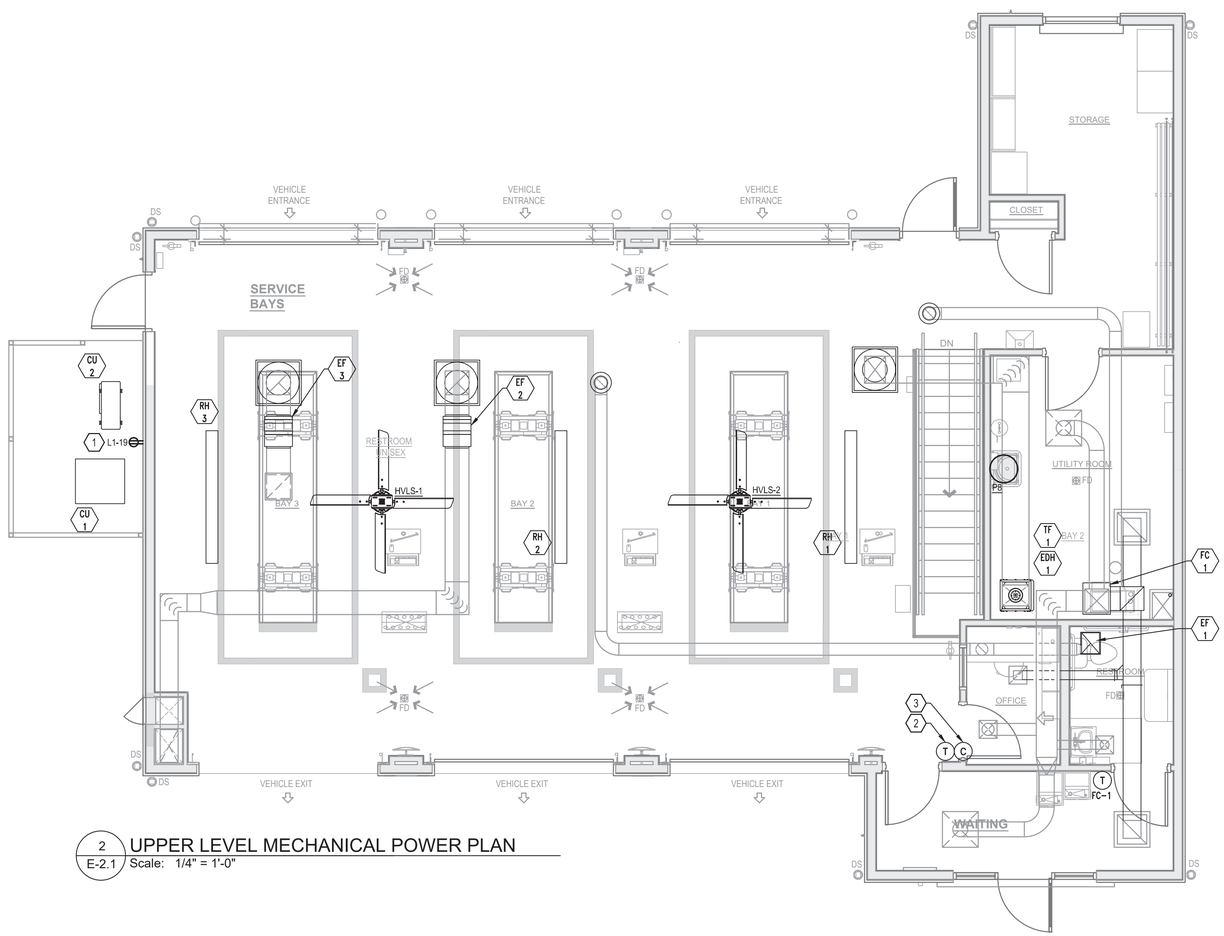

2 E-2.1 UPPER LEVEL MECHANICAL POWER PLAN
Scale: 1/4" = 1'-0"

ELECTRICAL FEEDER SCHEDULE - MECHANICAL EQP

TAG	CIRCUIT	FEEDER	DISCONNECT SIZE	NOTES
EF-1	SEE NOTE 5	3/4"C., 2#12, #12 GRD.	30A	4,5
EF-2	L1-15	3/4"C., 2#12, #12 GRD.	30A	1,2,3,8
EF-3	L1-17	3/4"C., 2#12, #12 GRD.	30A	1,2,3,8
TF-1	L1-26	3/4"C., 2#12, #12 GRD.	30A	1,2,3,8
HVLS-1	L2-17,19	3/4"C., 2#12, #12 GRD.	30A	1,2,3
HVLS-2	L2-21,23	3/4"C., 2#12, #12 GRD.	30A	1,2,3
FC-1	L2-29,31	3/4"C., 2#12, #12 GRD.	30A	1,2,3
FC-2	L2-25,27	3/4"C., 2#12, #12 GRD.	30A	1,2,3,6
CU-1	L2-33,35	3/4"C., 2#10, #10 GRD.	30A	1,2,3
CU-2	L2-25,27	3/4"C., 2#12, #12 GRD.	30A	1,2,3,6
RH-1	L1-31,33	3/4"C., 2#12, #12 GRD.	30A	1,2,3
RH-2	L1-35,37	3/4"C., 2#12, #12 GRD.	30A	1,2,3
RH-3	L1-39,41	3/4"C., 2#12, #12 GRD.	30A	1,2,3
EDH-1	L2-37,39,41	1"C., 3#8, #10 GRD.	60A	1,2,3
P8	L1-20	3/4"C., 2#12, #12 GRD.	30A	1,7
P13	L1-18	3/4"C., 2#12, #12 GRD.	30A	7
P16	L1-16	3/4"C., 2#12, #12 GRD.	30A	7
P18	L1-14	3/4"C., 2#12, #12 GRD.	30A	7
P20	DP-3	1-1/2"C., 2#2, #8 GRD.	100A	1,7

NOTES:

1. PROVIDE DISCONNECT: NEMA 1 FOR INTERIOR DRY LOCATIONS NEMA 3R FOR EXTERIOR OR WET LOCATIONS LOCATE ON UNISTRUT ADJACENT TO UNIT
2. FUSE FOR MOTOR OVERLOAD PROTECTION BASED ON NAMEPLATE DATA
3. 100K MAX AVAILABLE FAULT CURRENT; SCCR RATING TO INCLUDE ALL COMPONENTS, NO ADDITIONAL UPSTREAM PROTECTION
4. PROVIDE MOTOR-RATED SWITCH
5. CIRCUIT AND INTERLOCK WITH RESTROOM LIGHTS
6. INDOOR UNIT POWERED BY OUTDOOR UNIT. PROVIDE SINGLE POINT CONNECTION.
7. COORDINATE CORD/PLUG CONNECTION REQUIREMENTS WITH EQUIPMENT SUPPLIER PRIOR TO ROUGH-IN.
8. INTERLOCK TF-1, EF-2, EF-3 AND PIT LIGHT SWITCH FOR SIMULTANEOUS OPERATION OPERATE DURING OCCUPIED HOURS

KEY NOTES:

1. GFCI, WP WITH PLUG INSERTED.
2. PROVIDE 1/2"C., FOR THERMOSTAT. PROVIDE BACKBOX +48"AFF. ONE THERMOSTAT TO CONTROL ALL THREE RADIANT HEATERS AS INDICATED ON MECHANICAL DRAWINGS.
3. PROVIDE 1/2" C., FOR HVLS FAN CONTROLLER. PROVIDE BACKBOX +48"AFF.

BRAMIC DESIGN GROUP PLLC
8003 S. GALILEO LN.
TUCSON, AZ 85747
PHONE: (520) 401-9183

COPYRIGHT NOTICE
This drawing is the property of the above referenced Professional and is not to be used for any purpose other than the specific project and site names herein, and cannot be reproduced in any manner without the express written permission from the Professional.

DATE	ISSUE
05.17.24	ISSUED FOR PERMIT REVIEW SET

DATE	REVISION

PROFESSIONAL SEAL

Registered Professional Engineer (Elec) CERTIFICATE NO. 32749 SARAH JEWETT LESKA Date Signed 05/17/24 ARIZONA, U.S.A. EXPIRES 09/30/2025

PROFESSIONAL IN CHARGE
SLL

PROJECT MANAGER
SLL/KY

QUALITY CONTROL
SLL/KY

DRAWN BY
KY/RW/RJJ

PROJECT ADDRESS
2920 S. PARK AVE
TUCSON ARIZONA 85713

VALVOLINE INSTANT OIL CHANGE

BDG PROJECT NUMBER
23-849

SHEET NAME
MECHANICAL POWER PLANS & EQUIPMENT FEEDER SCHEDULE

SHEET #
E-2.1

7536 N. La Cholla Blvd.
Tucson, Arizona 85741
Phone (520) 622-2196
Fax (520) 622-2198
www.eda-az.com
Project #: 23110
EDA

THESE DOCUMENTS ARE INSTRUMENTS OF SERVICE AND PROTECTED BY COPYRIGHT. THESE DOCUMENTS MAY NOT BE REPRODUCED OR UTILIZED FOR ANY PURPOSE OTHER THAN ORIGINALLY INTENDED UNLESS AUTHORIZED, IN WRITING BY ELECTRICAL DESIGN ASSOCIATES, INC.

Hardi-Brick OPTION

BAY TRACKER (EQUIPMENT TO BE ORDERED THROUGH ZONES)	QUANTITY
BAY TRACKER PC	1
22IN. LCD CUSTOMERT DISPLAY MONITOR (1 PER BAY)	3
ASUS CHROMEBIT FOR CUSTOMER DISPLAY MONITOR (1 PER BAY)	3
360 DEGREE IP WAIT TIME CAMERA	1
IP TOP-SIDE BAY CAMERA (1 PER BAY)	3
IP BOTTOM SIDE BAY CAMERA (1 PER BAY)	3
8 CHANNEL POE GIGABIT ETHERNET SWITCH	1
WIFI BROADBAND ROUTER	2
SURGE PROTECTOR	1
MONITOR MOUNT (1 PER BAY)	3
PLANAR 22IN. WIDESCREEN VGA/DVI LED MONITOR (BOTTOM SIDE OF MONITOR) (1 PER BAY)	3
25FT. 18-AWG UNIVERSAL POWER CORD (NEMA 5-15P TO IEC320C13) (1 PER BAY)	3
DVI-I TO DVI-D AND HD15 VGA WYSE DVI SPLITTER CABLE - DVI SPLITTER - 8 IN (1 PER BAY)	3
2M DVI-D M/M DUAL LINK DIGITAL VIDEO CABLE 6.6FT. (1 PER BAY)	3
35FT. RAPIDRUN RUNNER MF CMG (1 PER BAY)	3
RR HD15+3.5 AUDIO FLYING LEAD 1.5FT. (2 PER BAY)	6
TRIPP LITE DISPLAY TV CEILING MONITOR MOUNT ARM SWIVEL TILT - CEILING (1 PER BAY)	3

SURVEILLANCE (EQUIPMENT TO BE ORDERED THROUGH ZONES)	QUANTITY
16 CHANNEL HYBRID (4TB)	1
GRIZZLY HD OVER ANALOG INDOOR/OUTDOOR OVERVIEW CAMERA (TYPICALLY 3 PER LOCATION)	8
GRIZZLY HD OVER ANALOG DOME CAMERA	15
VIDEO/AUDIO/POWER BALUN KIT (1 PER ANALOG CAMERA)	15
MICROPHONE (1 PER MANAGER'S OFFICE, 1 PER CUSTOMER LOBBY, 1 PER BAY)	5
18 CHANNEL POWER PANEL	1
22IN. LCD MONITOR	1

ALARM (EQUIPMENT TO BE ORDERED THROUGH ADI)	QUANTITY
MAIN ALARM PANEL HONEYWELL VISTA21 IP	1
KEYPAD HONEYWELL 6160	1
MOTION DETECTOR HONEYWELL DT8050	6
SIREN HONEYWELL 735BE	1
DOOR CONTACTS HONEYWELL 7939WG-GY	3
TELEPHONE CONNECTORS HONEYWELL RJ31X	1
BATTERY BACKUP	1
SECURITY CABINET (SAME AS #503 ON SHEET A-1)	1

GENERAL SECURITY NOTES

A. PROVIDE CONDUIT, BOXES, AND OTHER NECESSARY ACCESSORIES.
B. PROVIDE CAT6 CABLE IN 1" CONDUIT (MINIMUM) TO EACH CAMERA AND MICROPHONE. TERMINATE AT DVR LOCATED IN SECURITY CABINET UNDER THE COUNTER IN OFFICE.
C. PROVIDE #12 LOW-VOLTAGE WIRING IN 3/4" CONDUIT FROM EACH DOOR CONTACT, MOTION DETECTOR, AND SECURITY KEY PAD TO THE MAIN ALARM PANEL.
D. LOCATIONS OF DEVICES ARE DIAGRAMMATIC. VERIFY LOCATIONS WITH OWNER PRIOR TO FINAL PLACEMENT. COORDINATE CAMERA AIMING WITH OWNER.
E. DASHED LINES REPRESENT CAT6 WIRING.
F. TERMINATE WITH RJ45 CONNECTORS ON BOTH ENDS.
G. NUMERATE/LABEL ON BOTH ENDS.
H. MOUNT CAMERAS FOR BEST VIEW OF AREA. POSITION CAMERA SO AS NOT TO OBSTRUCT THE VIEW.

GENERAL NOTES

(1) RUN CONDUITS AND JUNCTION BOXES FOR ALL LOW VOLTAGE DEVICES SHOWN ON PLANS IN THE MOST DIRECT MANNER. OWNER'S INSTALLER TO PULL CABLE FOR POS, SECURITY, AND BAYTRACKER. G.C. TO EXTEND PHONE SERVICE WHERE REQUIRED IN BUILDING. MINIMUM CONDUIT SIZE TO BE 3/4".

(X) BAY TRACKER KEY NOTES

1 MOUNT TO BOTTOM SIDE OF PIT OPENING, CENTERED AT EDGE OF OPENING. PIT CAMERAS SHALL BE WIRED TO POE SWITCH IN UPPER LEVEL GREETER STATION.
2 UPPER LEVEL IP CAMERAS AND EXTERIOR OST CAMERA SHALL BE WIRED TO POE SWITCH LOCATED IN DVR CABINET.
3 RUN THE 35FT OF RAPIDRUN RUNNER MF CMG CABLE IN CONDUIT FROM INSIDE THE REMOTE TERMINAL (NEAR THE THIN CLIENT) TO THE LOCATION OF THE BOTTOM SIDE MONITOR. PLUG THE BOTTOM SIDE MONITOR INTO THE CEILING MOUNTED OUTLET THAT THE FAN PLUGS INTO AT THE END OF THE CATWALK (SECURE 25FT POWER CORD OFF OF MONITOR NEEDS WITH STRAPPING).
4 CAMERAS TO BE TERMINATED AT SECURITY CABINET. SECURITY CABINET TO BE INSTALLED UNDER COUNTER TOP IN UPSTAIRS OFFICE.
5 CONNECT LOWER LEVEL MONITORS TO UPPER LEVEL POS MONITOR WITH 35 FT RAPID RUN CABLE.
6 MOUNT EXTERIOR SECURITY CAMERA'S ON RECESSED JUCTION BOXES. FLUSH WITH BUILDING FINISH.

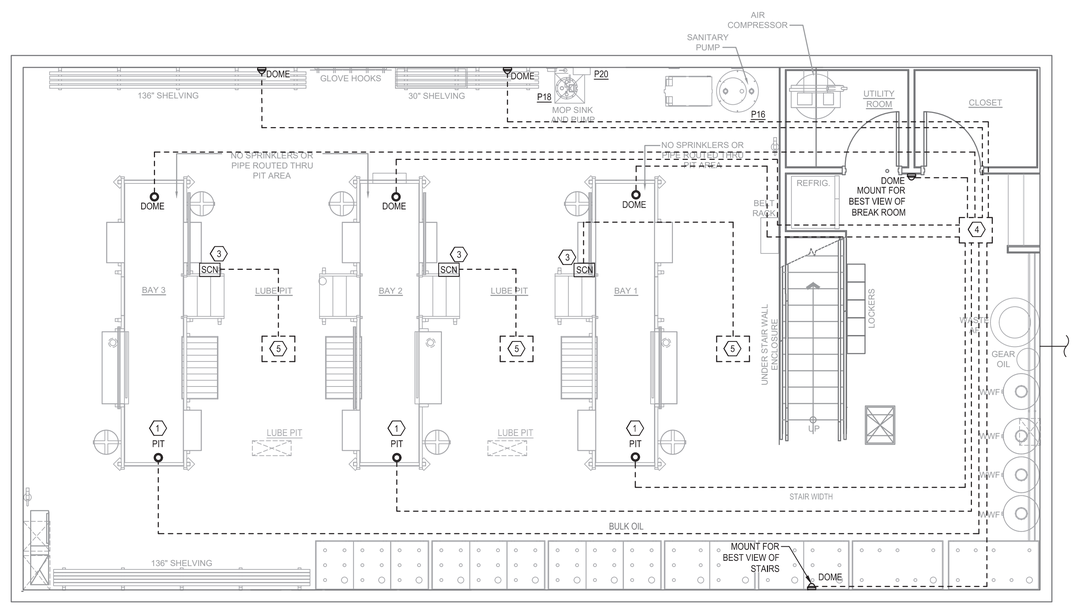

1 / E-3.1 LOWER LEVEL BAY TRACKER SYSTEMS PLAN
Scale: 1/4" = 1'-0"

BAY TRACKER/SECURITY LEGEND

SYMBOL	DESCRIPTION	MANUFACTURER	MODEL	SUPPLIER
DVR	DVR	WORLD CAM	ATR620H (2, 3-BAY) 32CHADH (4-BAY)	ZONES
OST	OUTDOOR STACK CAMERA	WORLD CAM	IPC-D023N3	ZONES
IP	IP CAMERAS	WORLD CAM	NB301C	ZONES
PIT	PIT OPENING CAMERAS	WORLD CAM	CC2000	ZONES
OB	OUTDOOR BULLET CAMERA	WORLD CAM	HD1080POVIRBC	ZONES
DOME	INDOOR DOME CAMERA	WORLD CAM	HD1080PVIRDC	ZONES
MIC	MINI MICROPHONE	WORLD CAM	1"CCTV AUDIO MIC	ZONES
PP	18 CHANEL POWER PANEL	WORLD CAM	IC-PD1218-12AUL	ZONES
POE	POWER OVER ETHERNET	BV SECURITY	BV-SW800G	ZONES
WR	WIRELESS ROUTER	TP-LINK	AC1750	ZONES
MON	MONITOR	VIEWSONIC	VA2265SMH	ZONES
SP	SURGE PROTECTOR	TRIPP LITE	1800W	ZONES
MIN	MINI PC	HEWLETT PACKARD	ELITE DESK	ZONES
CB	CHROMEBIT	ASUS	CHROMEBIT	ZONES
MAP	MAIN ALARM PANEL	HONEYWELL	VISTA21 IP	ADI GLOBAL DISTRIBUTION
KP	KEYPAD	HONEYWELL	6160	ADI GLOBAL DISTRIBUTION
MD	MOTION DETECTOR	HONEY WELL	DT8050	ADI GLOBAL DISTRIBUTION
S	SIREN	HONEYWELL	735BE	ADI GLOBAL DISTRIBUTION
DC	DOOR CONTACT	HONEYWELL	951 WG (NEW BLDG) 7939WG-GY (EXIST. BLDG)	ADI GLOBAL DISTRIBUTION
TEL	TELEPHONE CONNECTOR	HONEYWELL	RJ31X	ADI GLOBAL DISTRIBUTION
SC	SECURITY CABINET ASSEMBLY		BW-BW 215, BW-B224, OE-40AM1337	ADI GLOBAL DISTRIBUTION
SCN	WIDESCREEN MONITOR	PLANAR	997-6897-00	
	UNIVERSAL POWER CORD	WORLD CAM	14719	
	DVI SPLITTER	WYSE	DVI92030202L	
	DIGITAL VIDEO CABLE	DUAL LINK	26911	ZONES
	35FT RAPIDRUN RUNNER	WORLD CAM	60004	
	AUDIO LEAD	WORLD CAM	60048	
	MONITOR MOUNTING ARM	TRIPP LITE	DCTM	

CONTACT INFORMATION:

ZONES
785 CENTER AVE.
CAROL STREAM, IL 60188
BRYAN ROSSENBLUM
PH. 630.227.6350
bryan.rosenblum@zones.com

ADI GLOBAL DISTRIBUTION
5601 CREEK RD.
CINCINNATI, OH 45242
TROY (ABE) ABRAHAM
PH. 513.772.1851
troy.abraham@adiglobal.com

NOTE:
All equipment supplied by Zones will be provided by Owner. Zones equipment will be delivered in two stages:
Stage 1: Ceiling monitor mounts, cameras, 35ft. rapidrun runner MF CMG, power panel, mini microphone for install by G.C., prior to P.O.S. start up.
Stage 2: DVR, monitors, power cords, DVI splitters, video cables, audio flying leads, surge protector, mini PC, P.O.E., Chromebit, wireless router will be delivered with P.O.S. equipment, placed and started by Zones with P.O.S. equipment.

All equipment supplied by ADI will be provided by Owner and installed by G.C. G.C. is responsible for contacting 1-800-VALVOLINE to activate alarm panel.

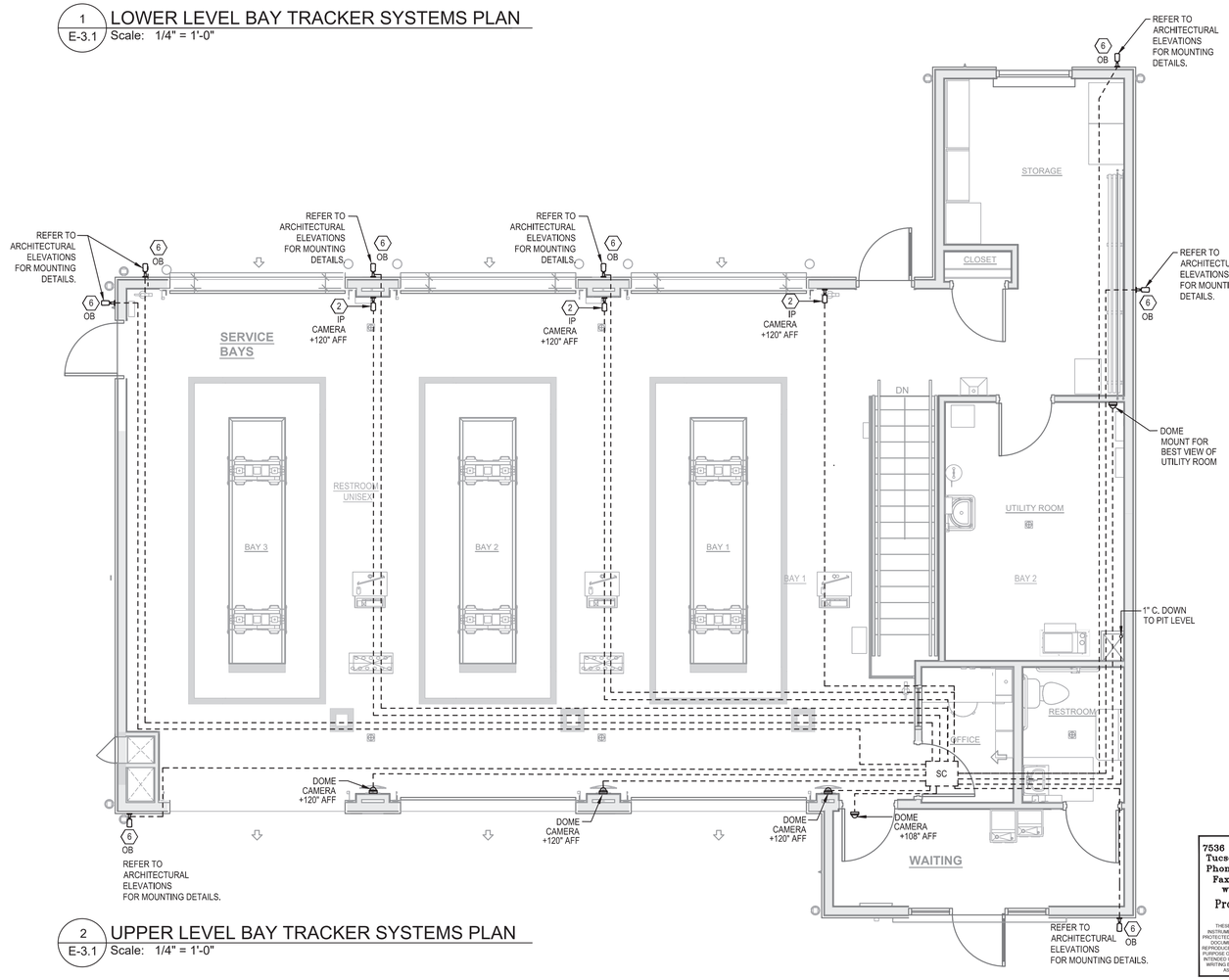

2 / E-3.1 UPPER LEVEL BAY TRACKER SYSTEMS PLAN
Scale: 1/4" = 1'-0"

7536 N. La Cholla Blvd.
Tucson, Arizona 85741
Phone (520) 622-2196
Fax (520) 622-2198
www.eda-az.com
Project #: 23110
EDA

THESE DOCUMENTS ARE INSTRUMENTS OF SERVICE AND PROPERTY OF ELECTRICAL DESIGN ASSOCIATES, INC. THESE DOCUMENTS MAY NOT TO BE REPRODUCED OR UTILIZED FOR ANY PURPOSE OTHER THAN ORIGINALLY INTENDED UNLESS AUTHORIZED, IN WRITING BY ELECTRICAL DESIGN ASSOCIATES, INC.

Hardi-Brick OPTION

BRAMIC DESIGN GROUP PLLC
8003 S. GALILEO LN.
TUCSON, AZ 85747
PHONE: (520) 401-9183

COPYRIGHT NOTICE
This drawing is the property of the above referenced Professional and is not to be used for any purpose other than the specific project and site names herein, and cannot be reproduced in any manner without the express written permission from the Professional.

DATE	ISSUE
05.17.24	ISSUED FOR PERMIT REVIEW SET

DATE	REVISION

PROFESSIONAL SEAL

Registered Professional Engineer (Elec) CERTIFICATE NO. 32749 SARAH JEWETT LESKA Date Signed 02/05/24 ARIZONA, U.S.A. EXPIRES 09/30/2025

PROFESSIONAL IN CHARGE
SLL

PROJECT MANAGER
SLL/KY

QUALITY CONTROL
SLL/KY

DRAWN BY
KY/RW/RJJ

PROJECT ADDRESS
2920 S. PARK AVE
TUCSON ARIZONA 85713

Valvoline Instant Oil Change

VALVOLINE INSTANT OIL CHANGE

BDG PROJECT NUMBER
23-849

SHEET NAME
SYSTEMS PLANS & LEGENDS

SHEET #
E-3.0

POS WIRING DIAGRAM

A. DASHED LINES REPRESENT CAT6 WIRING.
B. CAT6 WIRING TO BE TERMINATED WITH RJ45 CONNECTORS ON BOTH ENDS.
C. TERMINATE CAT6 WIRES IN POINT OF SALE PODIUM TO 4 PORT PATCH PANEL MODEL #N236-004-WH.
D. CAT6 WIRES IN GREETER STATION SHALL BE TERMINATED TO 12 PORT PAT PANEL MODEL #N050-012.
E. NUMBER/LABEL CAT6 WIRING ON BOTH ENDS AND TERMINATE INTO PATCH PANEL. NUMBER/LABEL PANEL ON FRONT OF PATCH PANEL.

POS KEY NOTES

1 REFER TO POWER PLAN FOR CONDUIT STUB-UP LOCATIONS.
2 INSTALL DVR, SURGE PROTECTOR, POE, AND POWER PANEL INSIDE THE SECURITY CABINET. INSTALL SECURITY CABINET UNDER COUNTER TOP IN UPSTAIRS OFFICE.

SECURITY WIRING DIAGRAM

A. 22-4 WIRE USED FOR KEY PAD.
B. PROVIDE LOW VOLTAGE WIRING IN 3/4" CONDUIT FROM SECURITY KEY PAD TO THE MAIN ALARM PANEL LOCATED ON THE PLYWOOD BACKBOARD IN UTILITY ROOM.
C. MOUNT MOTION DETECTORS AT 110" AFF IN BAY AND 90" AFF IN WAITING AREA.

SECURITY KEY NOTES

1 PROVIDE AUDIBLE/VISUAL ALARM TO ACTIVATE IN THE EVENT OF SUMP PUMP FAILURE. VERIFY EXACT LOCATION AND MOUNTING HEIGHT WITH OWNER PRIOR TO ANY ROUGH-INS. ROVIDE CONDUIT TO SUMP LOCATION PER MANUFACTURER'S REQUIREMENTS. VERIFY ALL ELECTRICAL REQUIREMENTS WITH EQUIPMENT VENDOR. BRAND:SJE RHOMBUS TANK ALERT XT MODEL# 1009923.
2 PROVIDE FEMALE ETHERNET WALL PLATE.

GENERAL NOTES

(1) RUN CONDUITS FOR LV IN THE MOST DIRECT MANNER. OWNER'S INSTALLER TO PULL CABLE FOR POS, SECURITY, PHONE LOCATED IN OFFICE AND BAYTRACKER. G.C. TO EXTEND PHONE SERVICE WHERE REQUIRED IN BUILDING. MINIMUM CONDUIT SIZE TO BE 3/4".
(2) LOW VOLTAGE DEVICES SHOWN SHALL BE SUPPLIED AND INSTALLED BY OWNER VENDOR - GC COORDINATE.

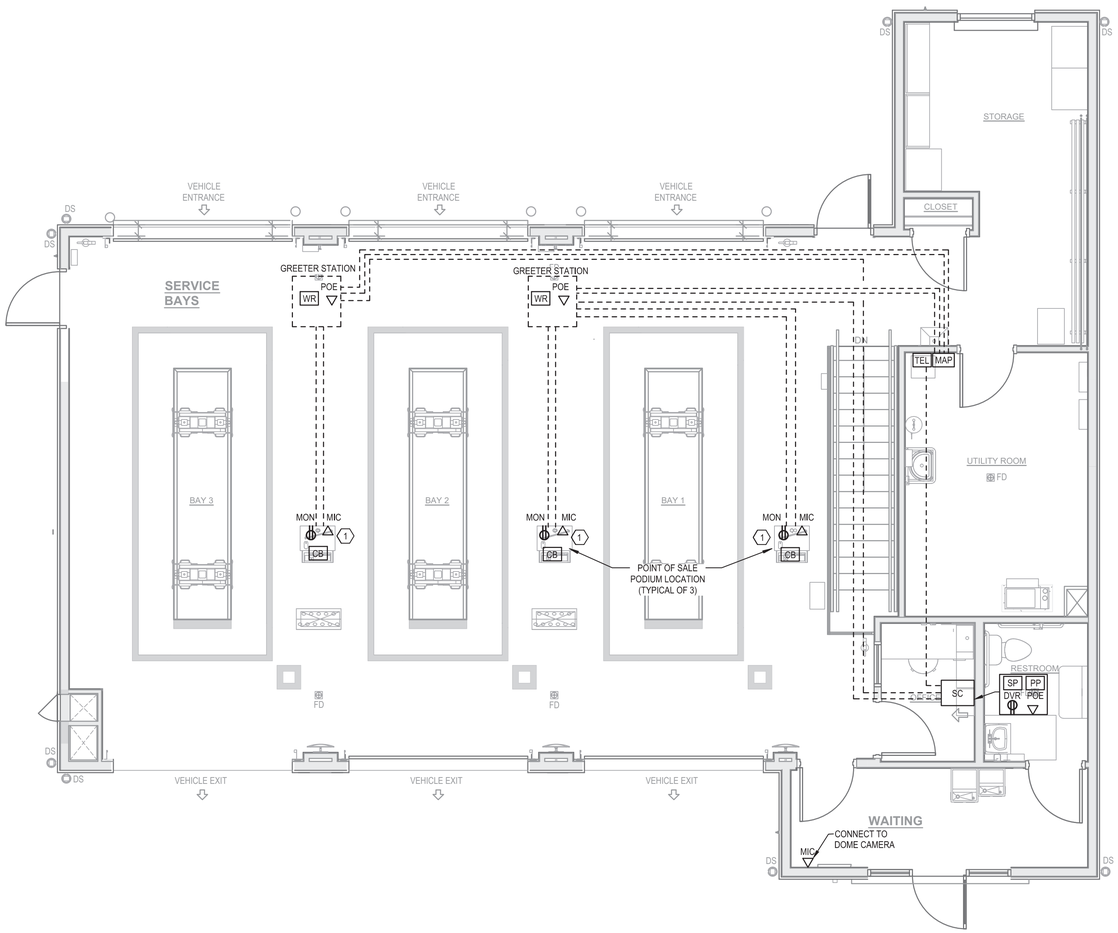

1 / E-3.2 UPPER LEVEL POS SYSTEMS PLAN
Scale: 1/4" = 1'-0"

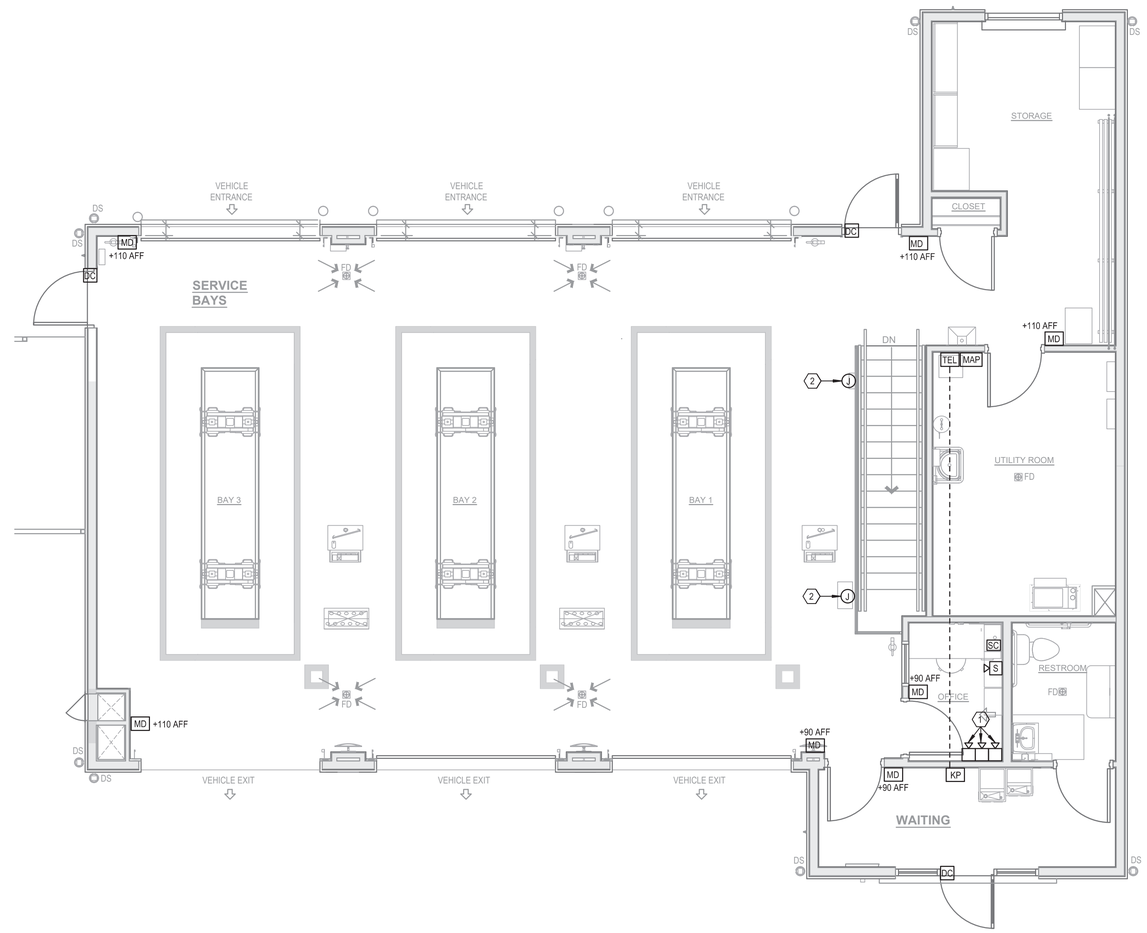

2 / E-3.2 UPPER LEVEL SECURITY SYSTEMS PLAN
Scale: 1/4" = 1'-0"

7536 N. La Cholla Blvd.
Tucson, Arizona 85741
Phone (520) 622-2196
Fax (520) 622-2198
www.eda-az.com
Project #: 23110

THESE DOCUMENTS ARE INSTRUMENTS OF SERVICE AND PROTECTED BY COPYRIGHT. THESE DOCUMENTS ARE NOT TO BE REPRODUCED OR USED FOR ANY PURPOSE OTHER THAN ORIGINALLY INTENDED UNLESS AUTHORIZED, IN WRITING BY ELECTRICAL DESIGN ASSOCIATES, INC.

EDA

Hardi-Brick OPTION

BRAMIC DESIGN GROUP PLLC
8003 S. GALILEO LN.
TUCSON, AZ 85747
PHONE: (520) 401-9183

COPYRIGHT NOTICE
This drawing is the property of the above referenced Professional and is not to be used for any purpose other than the specific project and site names herein, and cannot be reproduced in any manner without the express written permission from the Professional.

DATE	ISSUE
05.17.24	ISSUED FOR PERMIT REVIEW SET

DATE	REVISION

PROFESSIONAL SEAL

Registered Professional Engineer (Elec)
CERTIFICATE NO. 32749
SARAH JEWETT LESKA
Date Signed 05/17/24
ARIZONA, U.S.A.
EXPIRES 09/30/2025

PROFESSIONAL IN CHARGE
SLL

PROJECT MANAGER
SLL/KY

QUALITY CONTROL
SLL/KY

DRAWN BY
KY/RW/RJJ

PROJECT ADDRESS
2920 S. PARK AVE
TUCSON ARIZONA 85713

Valvoline Instant Oil Change

VALVOLINE INSTANT OIL CHANGE

BDG PROJECT NUMBER
23-849

SHEET NAME
LOW VOLTAGE PLANS

SHEET #
E-3.1

JOB NAME: VALVOL JOB NO:23110 RATED ISC: 65KAIC PANEL NO: DP
VOLTAGE: 120/208 PHASE: 3 WIRE: 4 MAIN: MCB 400 AMP TYPE: NEMA 3R
MOUNTING: PAD

REMARKS: PROVIDE SERVICE ENTRANCE ENGRAVED ACRYLIC NAMEPLATE

CKT	CIRCUIT DESCRIPTION	BKR	POLE	LOAD	REMARKS
1	PANEL L1	200	3	33.8	
2	PANEL L2	200	3	38.5	
3	P20 - WH	90	2	14.0	
4	AIR COMP	60	2	6.4	
5	SPARE	200	3		
6	SPARE	100	3		
7	SPACE	200	3		
8	SPACE	100	3		
CONNECTED TOTALS:				93	
LARGEST MOTOR/CONTINUOUS x 1.25				18	TOTAL DEMAND (KVA): 96
NON-CONTINUOUS				79	NON-COINCIDENT (KVA):
DEMAND:				96	NET KVA: 96 AMP: 267

JOB NAME: VALVOL JOB NO: 23110 RM: UTIL RATED ISC: 22000 PANEL NO: L1
VOLTAGE: 120/208 PHASE: 3 WIRE: 4 MAIN: MCB 200 AMP TYPE: NEMA 1
MOUNTING: SURFACE

REMARKS: PROVIDE PANEL WITH ISOLATED GROUND

REMARKS:	BKR	CKT	HP	KVA A	KVA B	KVA C	HP	CKT	BKR	REMARKS:
LTS EXTERIOR	20/1	1		0.5 / 0.4				2	20/1	REC AIR DRYER
LTS LOWER INTERIOR	20/1	3			1.4 / 1.5			4	20/1	REC REFRIG
LTS UPPER INTERIOR, EF-1	20/1	5				1.3 / 1.5		6	20/1	REC ABOVE COUNTER
LTS CONTROL RELAYS	20/1	7		0.5 / 1.3				8	20/1	REC LOWER LEVEL
EXTERIOR CAMERAS	20/1	9			0.4 / 0.7			10	20/1	' '
BLDG SIGNAGE	20/1	11				1.5 / 0.5		12	20/1	' '
MONUMENT SIGN	20/1	13		1.0 / 0.9				14	20/1	P18 SINK SUMP PUMP
EF-2	20/1	15			1.2 / 0.9			16	20/1	P16 PIT SUMP PUMP
EF-3	20/1	17				0.7 / 1.2		18	20/1	P13 FOUND SUMP PUMP
REC GFCI EXTERIOR MECH	20/1	19		0.2 / 1.7				20	20/1	P8 WH
CO @ PNEUMATIC PUMPS	20/1	21			0.5 / 0.4			22	20/1	REC TELE/ SECURITY
REC LOW LEV UTILITY, HALL,CLOS	20/1	23				0.4 / 0.4		24	20/1	REC UTIL RM, STORAGE
SPARE	20/1	25		1.2				26	20/1	TF-1 TRANSFER FAN
' '	20/1	27			0.5			28	20/1	IRRIGATION CONTROLLER
' '	20/1	29						30	20/1	SPARE
RH-1	20/2	31		1.6				32	20/1	SPARE
		33			1.6			34	20/1	' '
RH-2	20/2	35				1.6		36	20/1	' '
		37		1.6				38	20/1	' '
RH-3	20/2	39			1.6			40	20/1	' '
		41				1.6		42	20/1	' '
CONNECTED TOTALS:			-	10.7	10.5	10.6	-			
LARGEST MOTOR/CONTINUOUS x 1.25				2.5	3.7	3.6	TOTAL DEMAND (KVA): 33.8			
NON-CONTINUOUS				8.7	7.6	7.7	NON-COINCIDENT (KVA):			
DEMAND:				11.2	11.3	11.3	NET KVA: 34 AMP: 94			

JOB NAME: VALVOL JOB NO: 23110 RM: UTIL RATED ISC: 22000 PANEL NO: L2
VOLTAGE: 120/208 PHASE: 3 WIRE: 4 MAIN: MCB 200 AMP TYPE: NEMA 1
MOUNTING: SURFACE

REMARKS: PROVIDE PANEL WITH ISOLATED GROUND

REMARKS:	BKR	CKT	HP	KVA A	KVA B	KVA C	HP	CKT	BKR	REMARKS:
BAY DOOR OPENER	20/1	1		1.2 / 0.4				2	20/1	REC RESTRM, WAITING
' '	20/1	3			1.2 / 0.7			4	20/1	REC EWC
' '	20/1	5				1.2 / 1.0		6	20/1	WAITING RM SIGNS
' '	20/1	7		1.2 / 1.0				8	20/1	TOWER SIGNAGE
' '	20/1	9			1.2 / 0.9			10	20/1	REC OFFICE
' '	20/1	11				1.2 / 0.5		12	20/1	OIL SEP SUMP PUMP
SPARE	20/1	13		0.7				14	20/1	REC SERVICE BAY
' '	20/1	15			0.5			16	20/1	REC BELL RINGER
HVLS-1	20/2	17				0.7 / 0.5		18	20/1	REC SERVICE BAY
		19		0.7 / 0.5				20	20/1	' '
HVLS-2	20/2	21			0.7 / 0.5			22	20/1	REC UPPER WALL FANS
		23				0.7 / 0.7		24	20/1	REC GREETER STATION
FC-2, CU-2	20/2	25		1.1 / 0.7				26	20/1	REC POINT OF SALE
		27			1.1 / 0.4			28	20/1	' '
FC-1	20/2	29				0.3 / 0.7		30	20/1	REC TOOL CHARGER
		31		0.3				32	20/1	SPARE
CU-1	25/2	33			1.6			34	20/1	' '
		35				1.6		36	20/1	' '
EDH-1	40/3	37		3.3				38	20/1	' '
		39			3.3			40	20/1	' '
		41				3.3		42	20/1	' '
CONNECTED TOTALS:			-	11.2	12.1	12.4	-			
LARGEST MOTOR/CONTINUOUS x 1.25				5.4	4.2	4.2	TOTAL DEMAND (KVA): 38.5			
NON-CONTINUOUS				6.9	8.8	9.1	NON-COINCIDENT (KVA):			
DEMAND:				12.3	12.9	13.2	NET KVA: 38 AMP: 110			

RISER NOTES

A. PROVIDE BONDING BAR NEAR THE GROUNDING ELECTRODE CONDUCTOR PER NEC 250.94. THE BONDING BAR SHALL BE CONNECTED TO THE GROUNDING ELECTRODE CONDUCTOR WITH A 6-AWG COPPER CONDUCTOR.
B. INCOMING ELECTRICAL SERVICE NOT TO PENETRATE BUILDING FOUNDATION.

PANEL NOTES

A. PROVIDE ISOLATED GROUND OUTLET AND POWER FOR COMPUTER TERMINAL. PULL RECEPTACLE AND EQUIPMENT GROUND WIRES.
B. PROVIDE ISOLATED GROUND OUTLET AND POWER FOR PRINTER. PULL RECEPTACLE AND EQUIPMENT GROUND WIRES.

ELECTRICAL LOAD SUMMARY

TOTAL SERVICE LOAD SUMMARY

Largest Motor	@	125%	Demand	17.5	KVA
Panel L1	@	100%	Demand	33.8	KVA
Panel L2	@	100%	Demand	38.5	KVA
Other Mechanical	@	100%	Demand	6.4	KVA
Total				96.1	KVA
120/208-3ph-4w	=	267	Amps		

PROVIDE 400 AMP SERVICE

ONE LINE DIAGRAM FEEDER SCHEDULE

ITEM	CU FEEDER	NOTES
200A PANEL	2-1/2"C, (4) #4/0, (2) #4 GRD.	PANELS L1, L2
400A SERVICE	(2) 2-1/2"C., (4) #4/0 IN EACH	SERVICE

FAULT CURRENT ANALYSIS

FAULT MARK	MAG DUCT	CABLE E	CABLE # SETS	CABLE SIZE	CABLE "C"	CABLE LENGTH	STEP	ISCP PERSPECTIVE FAULT KA	FC 1.732*L*ISCP / C*E*NO. SETS	M 1.00 / 1+f	ISCC ISCP*M	REMARKS	AIC RATING
AF-1							1	55600				BEGINNING ISCP FROM	
							2					LOCAL POWER CO.	
							3					OR ASSUME INFINITE BUS	
AF-2	TRUE	208	2	#4/0	15082	10	1	55600	0.15	0.87	48201	@ SWITCHBOARD DP	65,000
	FALSE	208	1	#4/0	16673	50	2	48201	1.20	0.45	21873	@ PANELS L1, L2	22,000
							3						

Key:
C - Cable Conductance Factor
E - Line to Line Voltage
Vp - Transformer Primary Line to Line Voltage
Vs - Transformer Secondary Line to Line Voltage

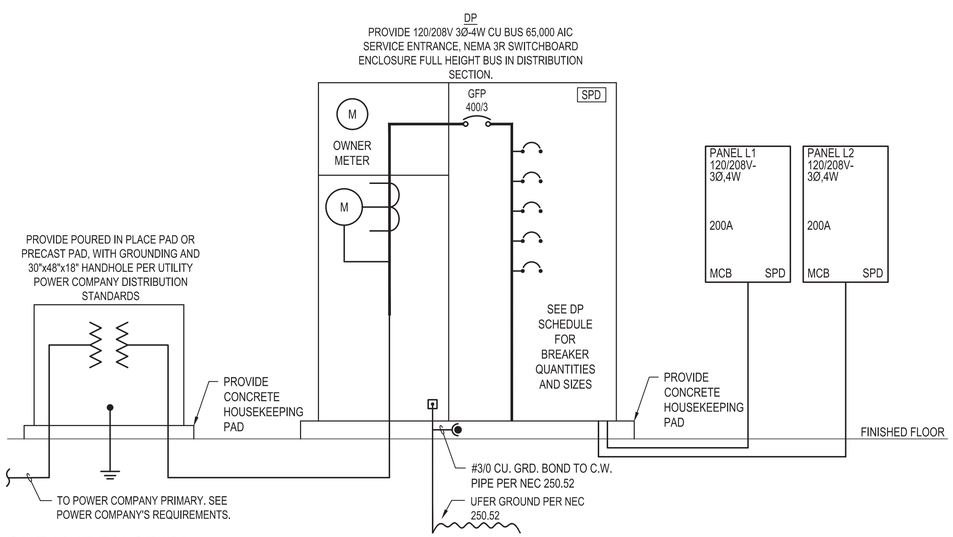

1 E-4.0 ONE LINE DIAGRAM
Scale: NOT TO SCALE

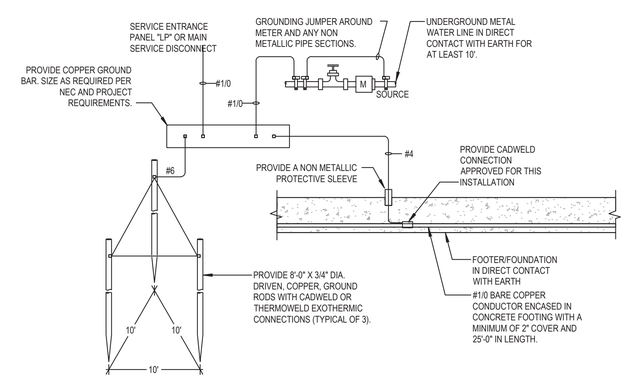

2 E-4.0 SERVICE GROUNDING ELECTRODE SYSTEM WIRING DIAGRAM
Scale: NOT TO SCALE

7536 N. La Cholla Blvd.
Tucson, Arizona 85741
Phone (520) 622-2196
Fax (520) 622-2198
www.eda-az.com
Project #: 23110

THESE DOCUMENTS ARE CONSIDERED PROPRIETARY AND PROTECTED BY COPYRIGHT. THESE DOCUMENTS ARE NOT TO BE REPRODUCED OR UTILIZED FOR ANY PURPOSE OTHER THAN ORIGINALLY INTENDED UNLESS AUTHORIZED, IN WRITING BY ELECTRICAL DESIGN ASSOCIATES, INC.

Hardi-Brick OPTION

BRAMIC DESIGN GROUP PLLC
8003 S. GALILEO LN.
TUCSON, AZ 85747
PHONE: (520) 401-9183

COPYRIGHT NOTICE
This drawing is the property of the above referenced Professional and is not to be used for any purpose other than the specific project and site names herein, and cannot be reproduced in any manner without the express written permission from the Professional.

DATE	ISSUE
05.17.24	ISSUED FOR PERMIT REVIEW SET

DATE	REVISION

PROFESSIONAL SEAL

Registered Professional Engineer (Elec) CERTIFICATE NO. 32749 SARAH JEWETT LESKA Date Signed 05/16/24 ARIZONA, U.S.A. EXPIRES 09/30/2025

PROFESSIONAL IN CHARGE
SLL
PROJECT MANAGER
SLL/KY
QUALITY CONTROL
SLL/KY
DRAWN BY
KY/RW/RJJ

PROJECT ADDRESS
2920 S. PARK AVE
TUCSON ARIZONA 85713

VALVOLINE INSTANT OIL CHANGE

BDG PROJECT NUMBER
23-849

SHEET NAME
ONE LINE DIAGRAM, SCHEDULES, CALCS & DIAGRAM

SHEET #
E-4.0

NOTE:

1. BASE AND COVER ARE OF MOLDED HIGH DENSITY POLYETHYLENE, U.V. STABLIZED.
2. COVER IS SECURED TO THE BASE WITH TWO CAPTIVE STAINLESS STEEL BOLTS.
3. SERVICE IDENTIFICATION (1" LETTERS) IS MOLDED INTO COVER.

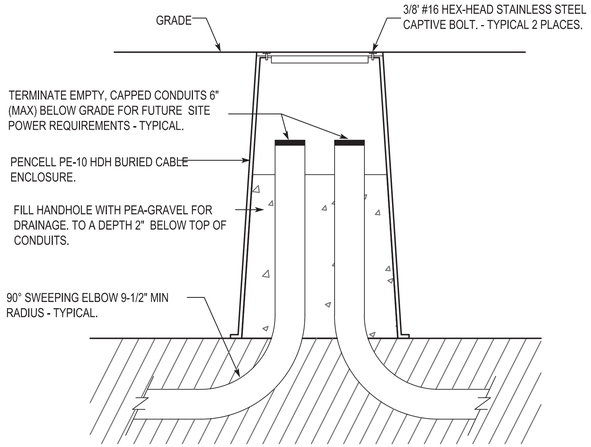

1 E-5.0 HANDHOLE

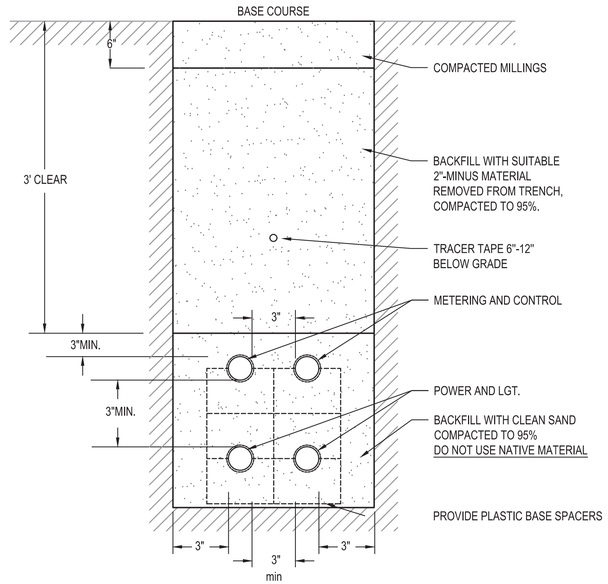

2 E-5.0 TYPICAL TRENCH SECTION DETAIL

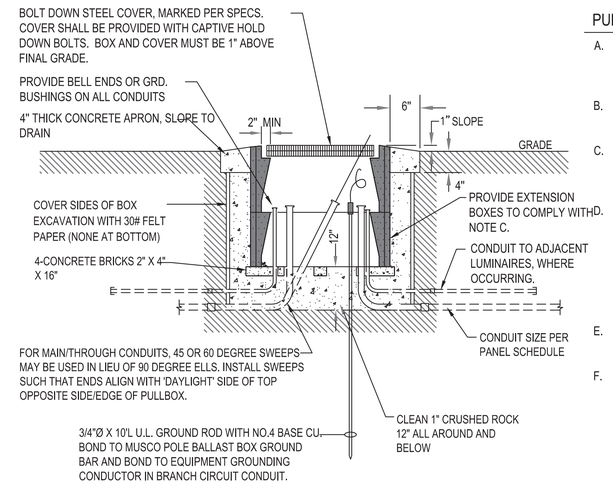

3 E-5.0 FLUSH IN-GRADE PULLBOX DETAIL

PULLBOX NOTES (THIS DETAIL ONLY):

A. CONDUIT FROM THE TYPICAL TRENCH SECTION SHALL NOT DEFLECT BY MORE THAN 1 IN./FT. FROM THE ALIGNMENT PRECEDING OR FOLLOWING THE PULL BOX.

B. COORDINATE EXACT PLACEMENT TO AVOID CONFLICTS WITH LANDSCAPING, HARDSCAPE, ETC.

C. TOP OF CONDUIT STUBS SHALL BE 12" MIN. FROM BOTTOM OF PULLBOX COVER AND 4" MIN. ABOVE BOTTOM OF CRUSHED ROCK ON INSIDE OF PULLBOX AT NO. 5/7 BOXES.

D. FUSE HOLDERS AND CONDUCTOR SPLICES SHALL BE WATERPROOFED PER NEC AND LOCAL JURISDICTION REQUIREMENTS. PROVIDE FUSES/FUSE HOLDERS FOR FIXTURE TAP CONDUCTORS PER NEC REQUIREMENTS. PULL CONDUCTORS THROUGH SPLICE FREE WHEREVER POSSIBLE. SPECIAL SYSTEMS CONDUCTORS SHALL NOT BE SPLICED.

E. TERMINATE CONDUITS IN RIGIDLY ATTACHED END BELLS OR GROUNDING BUSHINGS.

F. COORDINATE EXACT PLACEMENT OF BOXES PRIOR TO START OF WORK. LOCATE TO AVOID LOW SPOTS PRONE TO PONDING OF WATER.

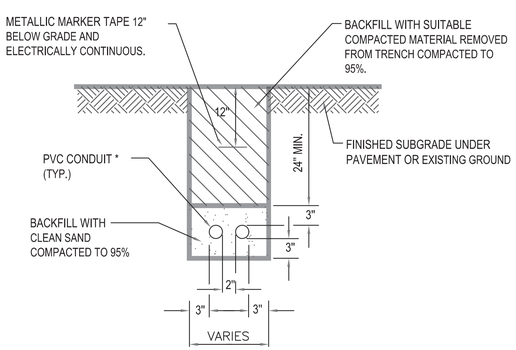

* NOTE: REFER TO ELECTRICAL DRAWINGS FOR SIZE AND QUANTITY OF CONDUITS.

4 E-5.0 TYPICAL TRENCH DETAIL

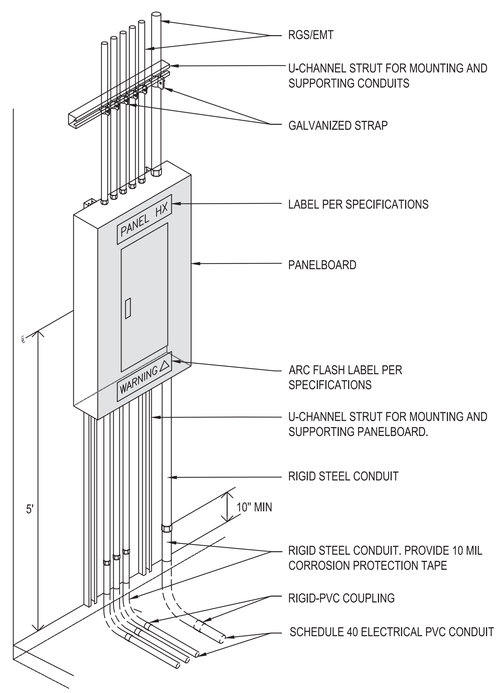

5 E-5.0 PANEL INSTALLATION DETAIL

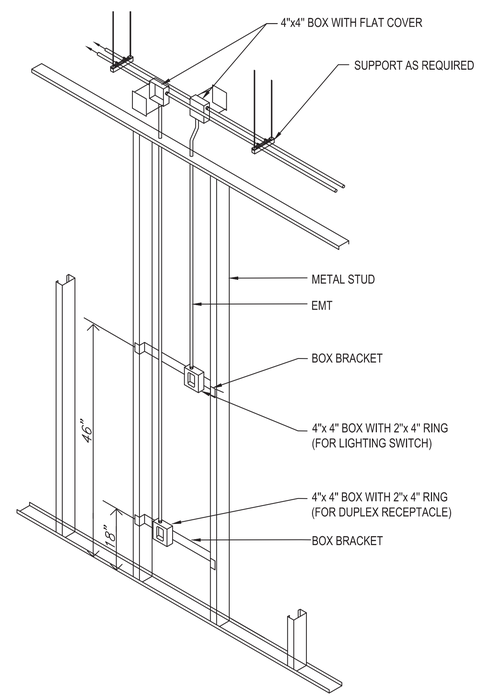

6 E-5.0 FLUSH IN WALL J-BOX INST. DETAIL

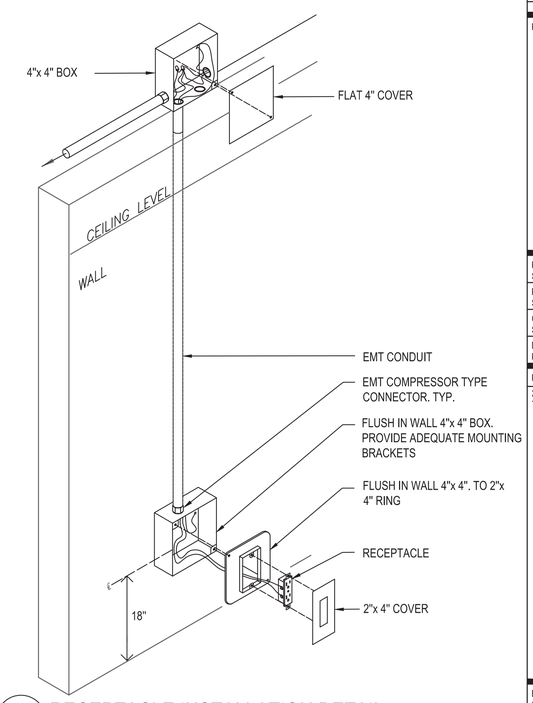

7 E-5.0 RECEPTACLE INSTALLATION DETAIL

7536 N. La Cholla Blvd.
Tucson, Arizona 85741
Phone (520) 622-2196
Fax (520) 622-2196
www.eda-az.com
Project #: 23110
EDA

THESE DOCUMENTS ARE INSTRUMENTS OF SERVICE AND PROTECTED BY COPYRIGHT. THESE DOCUMENTS ARE NOT TO BE REPRODUCED OR UTILIZED FOR ANY PURPOSE OTHER THAN THE PURPOSE INTENDED UNLESS AUTHORIZED, IN WRITING BY ELECTRICAL DESIGN ASSOCIATES, INC.

Hardi-Brick OPTION

BRAMIC DESIGN GROUP PLLC
8003 S. GALILEO LN.
TUCSON, AZ 85747
PHONE: (520) 401-9183

COPYRIGHT NOTICE
This drawing is the property of the above referenced Professional and is not to be used for any purpose other than the specific project and site names herein, and cannot be reproduced in any manner without the express written permission from the Professional.

DATE	ISSUE
05.17.24	ISSUED FOR PERMIT REVIEW SET

DATE	REVISION

PROFESSIONAL SEAL

Registered Professional Engineer (Elec) CERTIFICATE NO. 32749 SARAH JEWETT LESKA Date Signed 05/17/24 ARIZONA, U.S.A. EXPIRES 09/30/2025

PROFESSIONAL IN CHARGE
SLL

PROJECT MANAGER
SLL/KY

QUALITY CONTROL
SLL/KY

DRAWN BY
KY/RW/RJJ

PROJECT ADDRESS
2920 S. PARK AVE
TUCSON ARIZONA 85713

VALVOLINE INSTANT OIL CHANGE

BDG PROJECT NUMBER
23-849

SHEET NAME
DETAILS

SHEET #
E-5.0

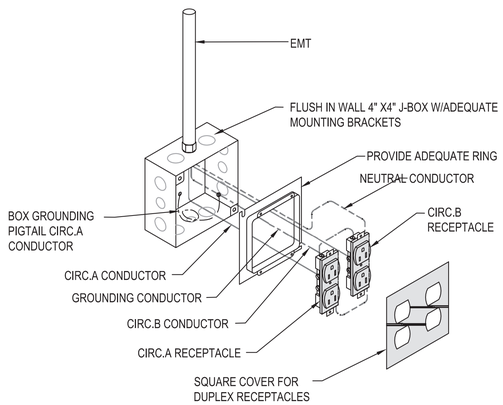

1 / E-5.1 QUAD RECEPTACLE INST. DETAIL

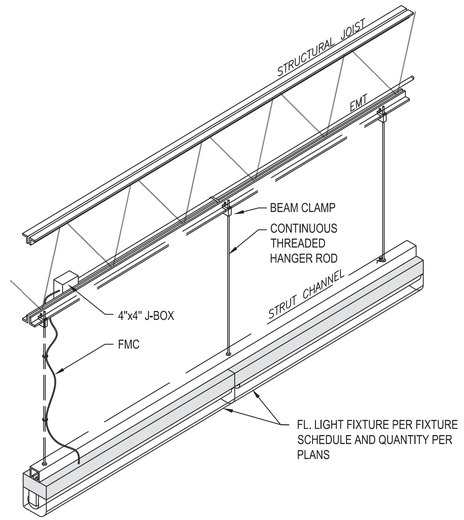

2 / E-5.1 LIGHTING FIXTURE INST. DETAIL

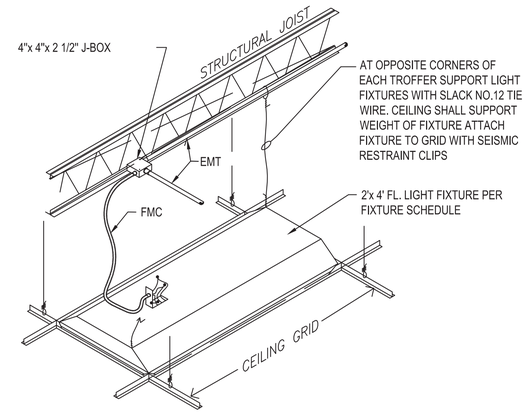

3 / E-5.1 2'x4' LIGHTING FIXTURE INST. DETAIL

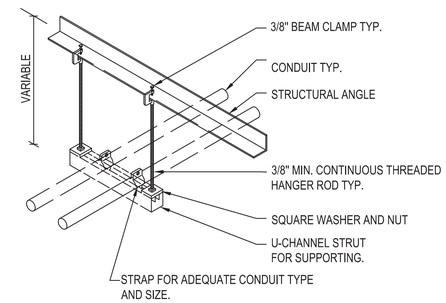

NOTE : THE TRAPEZE HANGER SUPPORTS SHALL BE INSTALLED @ 10 MAX. EACH OTHER.

4 / E-5.1 TRAPEZE HANGER DETAIL

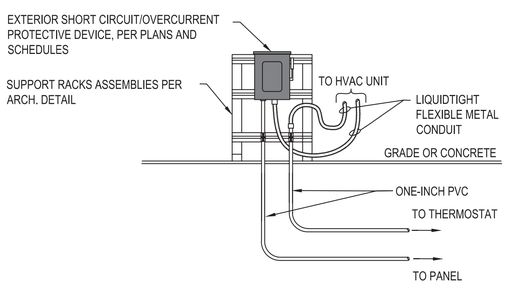

5 / E-5.1 DISCONNECT INST. DETAIL

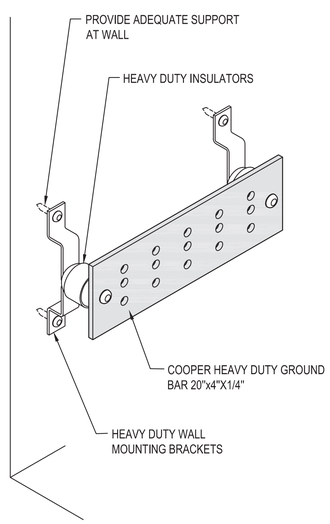

PART NUMBER 40153-020 CHATSWORTH PRODUCT

6 / E-5.1 GROUND BAR DETAIL

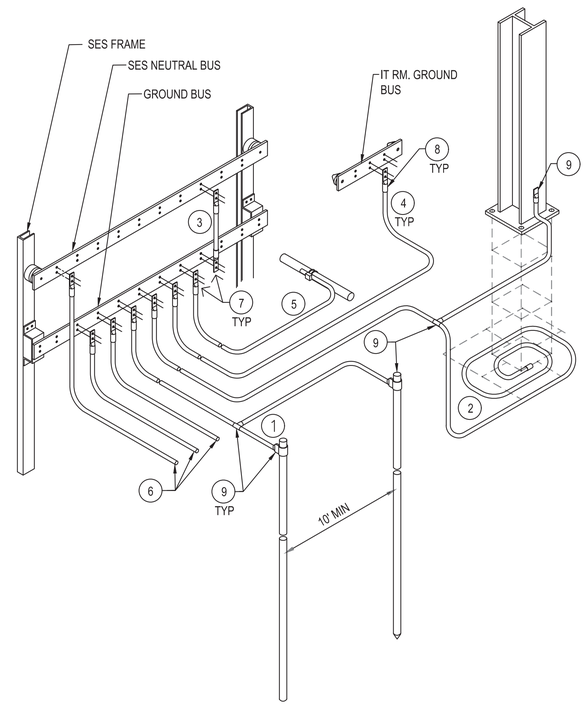

7 / E-5.1 GROUNDING SYSTEM TYPICAL DETAIL

KEY NOTES (THIS DETAIL ONLY):

1. #4/0 CU. GROUND ELECTRODE CONDUCTOR FROM COPPER PLATED STEEL GROUND RODS (3/4" DIA. X 10) TO SES GROUND BUS PER 2/E1.
2. #4/0 AWG BARE CU. UFER (CONCRETE ENCASED ELECTRODE) 40' MIN. LENGTH IN CONCRETE FOOTINGS. BOND TO REBAR SES GROUND BUS.
3. 250 MCM BARE CU. GRD. BETWEEN SES NEUTRAL AND GROUND BUS.
4. #4/0 BARE CU. CLASS M STRANDED FLEXIBLE CABLE GROUND IN 1"C BETWEEN SES GROUND BUS AND COPPER GROUND BUS BAR.
5. #4/0 BARE CU. GROUND TO BUILDING FIRE PROTECTION PIPING, DOMESTIC COLD WATER \ AND GAS PIPING. BOND TO GROUND BUS.
6. TO PANELS NEUTRAL AND GROUND BARS, SEE ONE LINE DIAGRAM FOR QTY. AND SIZE, ROUTE WITHIN FEEDER CONDUITS.
7. 2 HOLE COMPRESSION TERMINAL OR MECHANICAL LUG.
8. INSTALL 2 ADEQUATE BOLT, NUT, WASHERS AND P. WASHER @ EACH TERMINAL.
9. CADWELD CONNECTION.

7536 N. La Cholla Blvd.
Tucson, Arizona 85741
Phone (520) 622-2196
Fax (520) 622-2198
www.eda-az.com
Project #: 23110
EDA

THESE DOCUMENTS ARE INSTRUMENTS OF SERVICE AND PROTECTED BY COPYRIGHT. THESE DOCUMENTS ARE NOT TO BE REPRODUCED, CHANGED OR USED FOR ANY PURPOSE OTHER THAN ORIGINALLY INTENDED UNLESS AUTHORIZED, IN WRITING BY ELECTRICAL DESIGN ASSOCIATES, INC.

Hardi-Brick OPTION

BRAMIC DESIGN GROUP PLLC
8003 S. GALILEO LN.
TUCSON, AZ 85747
PHONE: (520) 401-9183

COPYRIGHT NOTICE
This drawing is the property of the above referenced Professional and is not to be used for any purpose other than the specific project and site names herein, and cannot be reproduced in any manner without the express written permission from the Professional.

DATE	ISSUE
05.17.24	ISSUED FOR PERMIT REVIEW SET

DATE	REVISION

PROFESSIONAL SEAL

Registered Professional Engineer (Elec) CERTIFICATE NO. 32749 SARAH JEWETT LESKA Date Signed 05/17/24 ARIZONA, U.S.A. EXPIRES 09/30/2025

PROFESSIONAL IN CHARGE
SLL

PROJECT MANAGER
SLL/KY

QUALITY CONTROL
SLL/KY

DRAWN BY
KY/RW/RJJ

PROJECT ADDRESS
2920 S. PARK AVE
TUCSON ARIZONA 85713

Valvoline Instant Oil Change

VALVOLINE INSTANT OIL CHANGE

BDG PROJECT NUMBER
23-849

SHEET NAME
DETAILS

SHEET #
E-5.1

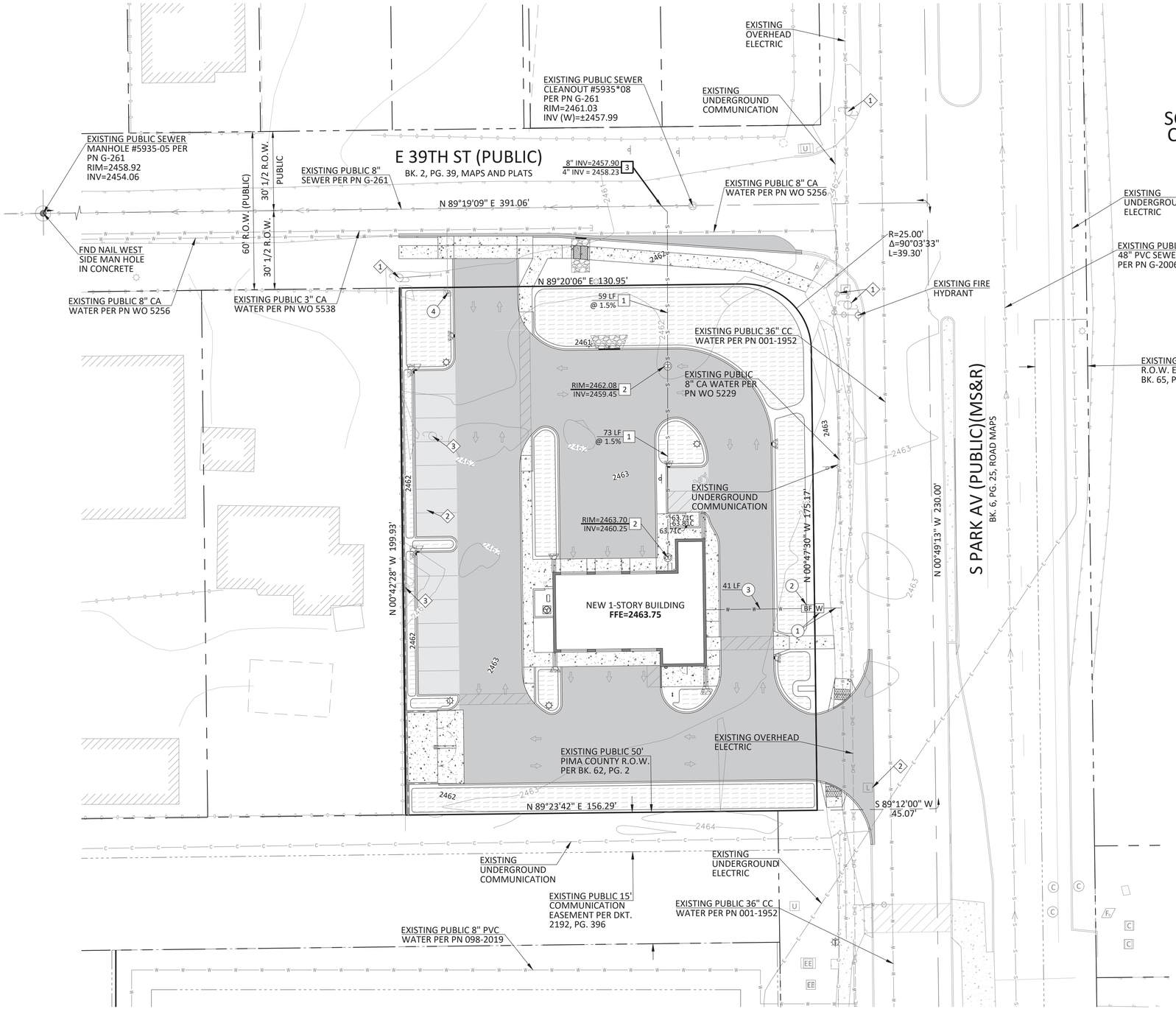

SCALE: 1"=20'
C.I. = 1 FOOT

SEWER KEYNOTES

1. NEW PRIVATE 4" SEWER SERVICE. SEE KEYNOTE FOR LENGTH AND SLOPE. CONNECT TO EXISTING PUBLIC MAIN WHERE SHOWN PER RWRD DETAIL 401.
2. NEW PRIVATE SEWER CLEANOUT. SEE KEYNOTE FOR RIM AND INVERT(S). CONTRACTOR TO CONFIRM INVERT ELEVATIONS MATCH BUILDING PLUMBING PLAN.
3. CONNECT TO EXISTING SEWER. SEE KEYNOTE FOR INVERTS. CONTRACTOR TO VERIFY EXISTING SEWER MAIN INVERT ELEVATION AND ALERT ENGINEER-OF-RECORD IF 1.1% MIN. SLOPE CAN NOT BE MAINTAINED FROM BUILDING.

WATER KEYNOTES

1. NEW PUBLIC 1.25" WATER SERVICE WITH 1" METER. CONTRACTOR TO COORDINATE TAP TO EXISTING MAIN AND METER INSTALLATION WITH TUCSON WATER PER WORK ORDER PROCESS.
2. NEW PRIVATE 1.25" BACKFLOW PREVENTER.
3. NEW PRIVATE 1.25" WATER SERVICE. SEE KEYNOTE LENGTH.
4. EXISTING 5/8" WATER METER #15461511 TO BE USED FOR SITE IRRIGATION. SEE IRRIGATION PLAN FOR INFORMATION.

OTHER UTILITY KEYNOTES

1. EXISTING UTILITY INFRASTRUCTURE TO REMAIN. CONTRACTOR TO PROTECT IN PLACE.
2. EXISTING UTILITY INFRASTRUCTURE TO BE REMOVED/RELOCATED. CONTRACTOR TO COORDINATE REMOVAL/RELOCATION WITH RESPECTIVE UTILITY COMPANY.
3. EXISTING POWER POLE. CONTRACTOR TO COORDINATE RELOCATION, AS REQUIRED, WITH TUCSON ELECTRIC POWER COMPANY.

PRIVATE WATER & BACKFLOW ASSEMBLY NOTES

1. ALL PLUMBING ASSOCIATED WITH WATER SERVICE LINE SHALL CONFORM TO THE REQUIREMENTS OF THE LATEST EDITION OF THE UNIFORM PLUMBING CODE.
2. ALL BEDDING SHADING, AND BACKFILL SHALL BE PER TUCSON WATER DETAIL SD 115 AT A MINIMUM. NO WATER SETTLING SHALL BE PERMITTED.
3. CONTRACTOR IS RESPONSIBLE FOR OBTAINING AND PAYING FOR BACKFLOW INSTALLATION PERMIT(S) FROM TUCSON WATER.
4. CONTRACTOR SHALL CONTACT TUCSON WATER'S BACKFLOW PREVENTION SECTION AT 791-2650 FOR INSPECTION.
5. THE BACKFLOW ASSEMBLY SHALL BE TESTED AFTER INSTALLATION BY A TUCSON WATER APPROVED CERTIFIED INSPECTOR PRIOR TO INSPECTION BY TUCSON WATER.
6. REDUCED PRESSURE ASSEMBLY SHALL BE WATTS FAE909HWQT OR EQUIVALENT, APPROVED BY TUCSON WATER (CALL BACKFLOW PREVENTION SECTION AT 791-2650 FOR APPROVED MODELS' LIST).
7. REDUCED PRESSURE ASSEMBLY SHALL BE INSTALLED, TESTED, AND INSPECTED PER CITY OF TUCSON ORDINANCE NO. 7380 ADOPTED MAY 21, 1990 OR AS REVISED THERETO.
8. BACKFLOW PREVENTER SHALL BE ENCLOSED IN "STRONG BOX" SBBC-CR (PHONE 800-729-1314) OR EQUIVALENT. SIZE TO FIT BACKFLOW PREVENTER ASSEMBLY. PAINT TO MATCH SCREEN WALLS AND MOUNT ON 4-INCH THICK CONCRETE PAD. CONTRACTOR TO PROVIDE LOCK AND 2 KEYS TO OWNER.

UTILITY NOTE

UTILITY LOCATIONS, AS SHOWN ON THE PLANS, WERE COMPILED AND ARE PRESENTED BASED UPON PRELIMINARY INFORMATION AVAILABLE TO RICK ENGINEERING COMPANY. UTILITY LOCATIONS AS SHOWN ARE NOT INTENDED TO BE EXACT OR COMPLETE AND RICK ENGINEERING COMPANY DOES NOT ACCEPT LIABILITY OR RESPONSIBILITY FOR ANY INACCURACIES IN THE UTILITY LOCATIONS OR ANY UTILITY RELOCATIONS THAT MAY BE NECESSARY. PRIOR TO EXCAVATION, ARIZONA STATUTES REQUIRE THAT ANYONE WHO INTENDS TO EXCAVATE MUST PROVIDE TWO FULL WORKING DAYS NOTICE TO THE OWNERS OF ALL UTILITIES WITHIN THE PROJECT AREA. EXCAVATORS SHOULD CONTACT "ARIZONA BLUE STAKE" @ 1-800-782-5348 TWO (2) FULL WORKING DAYS PRIOR TO EXCAVATION. SATURDAYS, SUNDAYS, AND STATE HOLIDAYS ARE NOT CONSIDERED WORKING DAYS. ALSO BE ADVISED THAT THERE MAY BE OTHER UTILITIES IN THE PROJECT AREA THAT ARE NOT MEMBERS OF "ARIZONA BLUE STAKE". THE CONTRACTOR IS RESPONSIBLE TO POTHOLE ALL UTILITIES (SHOWN OR NOT SHOWN ON THE PLANS) MARKED BY BLUE STAKE PRIOR TO COMMENCING CONSTRUCTION OPERATIONS.

PRIVATE UTILITY NOTES

1. ALL ON-SITE BUILDING SEWER CONNECTION LINES ARE PRIVATE. THE MATERIALS AND INSTALLATION SHALL BE PER THE REQUIREMENTS OF THE INTERNATIONAL PLUMBING CODE, LATEST EDITION.
2. ALL ON-SITE DOMESTIC WATER SUPPLY LINES ARE PRIVATE. THE MATERIALS AND INSTALLATION SHALL BE PER THE REQUIREMENTS OF THE INTERNATIONAL PLUMBING CODE, LATEST EDITION.

NO.	DATE	REVISION DESCRIPTION	BY

Registered Professional Engineer (Civil) CERTIFICATE NO. 70059 BLAKE BRANDAK ARIZONA U.S.A. 10-10-2024 PRELIMINARY NOT FOR CONSTRUCTION

RICK ENGINEERING COMPANY
3945 E FORT LOWELL ROAD - STE #111
TUCSON, AZ 85712
520.795.1000
rickengineering.com
San Diego - Riverside - San Luis Obispo - Sacramento - Orange - Tucson - Phoenix - Las Vegas - Denver

PROJECT NO: T5456

DEVELOPER

FLUID AUTOMOTIVE, LLC
7250 DALLAS PKWY, STE 800
PLANO, TX 75024
ATTN: NITIN BHAKTA
PH: (830) 237-4666
E: nitin.bhakta@cmg.team

SITE ADDRESS

2920 S PARK AV
TUCSON, ARIZONA 85713

W 3' OF LOT 1, LOTS 2, 3, 4, 11, 12, AND 13, AND THE W 3' OF LOT 14, OF THE GRANDVIEW ADDITION, BK. 2, PG. 39, M & P, LOCATED IN THE NW 1/4 OF THE NW 1/4 OF SECTION 30, T. 14 S., R. 14 E. G. & S.R.M., CITY OF TUCSON, PIMA COUNTY, ARIZONA

DEVELOPMENT PACKAGE for VALVOLINE SWC PARK & 39TH

utilities + easements plan

TD-DEV-0524-00155

Contact Arizona 811 at least two full working days before you begin excavation
ARIZONA811
Call 811 or click Arizona811.com